Request for Bids

(One-Envelope Bidding Process)

Construction of SMART Protected Structure for Rapid Multiplication of Potato Tuber Seeds through Root Apical Cutting
at
Phobjikha, Wangdue Phodrang,

RFB No: MoAL/DoA/WRKS6
Project: Accelerate Bhutan's Job Transformation through Renewable Natural Resource Value Chains (P506825)
Purchaser: Department of Agriculture, Ministry of Agriculture and Livestock
Country: Kingdom of Bhutan
Issued on: 19 October, 2026

Specific Procurement Notice

Request for Bids
(One-Envelope Bidding Process)

Employer: **Department of Agriculture, Ministry of Agriculture and Livestock (MoAL)**

Project: **Accelerate Bhutan's Job Transformation through Renewable Natural Resource Value Chains (P506825)**

Contract Title: **Construction of SMART Protected Structure for Rapid Multiplication of Potato Tuber Seeds through Root Apical Cutting**

Site: **Phobjikha, Wangdue Phodrang**

Country: **Bhutan**

Grant No.: **IDA-E4690**

RFB No: **MoAL/DoA/WRKS6**

Issued on: **October 19, 2026**

1. The Royal Government of Bhutan *intends to apply for* financing from the World Bank toward the cost of **Accelerate Bhutan's Job Transformation through Renewable Natural Resource Value Chains (P506825)** to be implemented by **DoA, MoAL**, and intends to apply part of the proceeds toward payments under the contract for Construction of SMART Protected Structure for Rapid Multiplication of Potato Tuber Seeds through Root Apical Cutting at Phobjikha, Wangdue Phodrang.

2. The **Accelerate Bhutan's Job Transformation through Renewable Natural Resource Value Chains** to be implemented by DoA, MoAL now invites sealed Bids from registered W3 medium national contractor as registered with Bhutan Construction and Transport Authority (BCTA) for the **Construction of SMART Protected Structure for Rapid Multiplication of Potato Tuber Seeds through Root Apical Cutting at Phobjikha, Wangdue Phodrang.**

3. Bidders may Bid for one or several contracts, as further defined in the Biding Document. Bidders wishing to offer discounts in case they are awarded more than one contract will be allowed to do so, provided those discounts are included in the Letter of Bid.

4. Bidding will be conducted through Request for Bids (RFB) following **National Market Approach as specified in the World Bank's Procurement Regulations for IPF Borrowers, Sixth Edition, February 2025 ("Procurement Regulations"),** and is open to all eligible Bidders as defined in the Procurement Regulations.

5. Interested eligible Bidders may obtain further information from the address mentioned below and inspect the bidding document during office hours from 0900 to 1700 hours at the address given below.

6. The bidding document in English may be downloaded from MoAL website (www.moal.gov.bt) by interested eligible Bidders.

7. Bids must be delivered to the address below on or before November 16, 2026 at 1300 Hours. Electronic bidding will not be permitted. Late Bids will be rejected. The envelope shall have both technical and financial bids. The bids shall be publicly opened in the presence of the Bidders' designated representatives and anyone who chooses to attend, at the address below on November 16, 2026 at 1430 Hours.

8. All Bids must be accompanied by Bid Securing Declaration

9. The address(es) referred to above is:

   Project Director
   RNR Jobs, PPD, MoAL
   Street Address: Chhagchhen Lam, Thimphu, Bhutan
   City: Thimphu
   ZIP/Postal Code: 11001
   Country: Bhutan
   Website: www.moal.gov.bt

Table of Contents

PART 1 – Bidding Procedures 2
Section I - Instructions to Bidders 3
Section II - Bid Data Sheet (BDS) 36
Section III - Evaluation and Qualification Criteria 42
Section IV - Bidding Forms 51
Section V - Eligible Countries 95
Section VI - Fraud and Corruption 96

PART 2 – Works' Requirements 98
Section VII - Works' Requirements 99
Sub-Section 1: BOQs 99
Sub-Section 2: Drawings 99
Sub-Section 3: Technical Specifications 99
Sub-Section 4: ESMP 99

PART 3 – Conditions of Contract and Contract Forms 127
Section VIII - General Conditions of Contract 128
Section IX - Particular Conditions of Contract 173
Section X - Contract Forms 177

PART 1 – Bidding Procedures

Section I - Instructions to Bidders

A. General....5
1. Scope of Bid....5
2. Source of Funds....6
3. Fraud and Corruption....6
4. Eligible Bidders....7
5. Eligible Materials, Equipment and Services....9

B. Contents of Bidding Document....10
6. Sections of Bidding Document....10
7. Clarification of Bidding Document, Site Visit, Pre-Bid Meeting....10
8. Amendment of Bidding Document....12

C. Preparation of Bids....12
9. Cost of Bidding....12
10. Language of Bid....12
11. Documents Comprising the Bid....12
12. Letters of Bid and Schedules....14
13. Alternative Bids....14
14. Bid Prices and Discounts....15
15. Currencies of Bid and Payment....16
16. Documents Comprising the Technical Proposal....16
17. Documents Establishing the Eligibility and Qualifications of the Bidder....16
18. Period of Validity of Bids....16
19. Bid Security....17
20. Format and Signing of Bid....19

D. Submission of Bids....20
21. Sealing and Marking of Bids....20
22. Deadline for Submission of Bids....21
23. Late Bids....21
24. Withdrawal, Substitution, and Modification of Bids....21

E. Public Opening of Technical Parts of Bids....22
25. Public Opening of Technical Parts of Bids....22

F. Evaluation of Bids – General Provisions....23
26. Confidentiality....23
27. Clarification of Bids....24
28. Deviations, Reservations, and Omissions....24
29. Nonmaterial Nonconformities....24

G. Evaluation of Technical Parts of Bids....25
30. Evaluation of Technical Parts....25
31. Determination of Responsiveness....25
32. Qualification of the Bidder....26
33. Subcontractors....26

H. Public Opening of Financial Parts of Bids 26
34. Public Opening of Financial Parts 26

I. Evaluation of Financial Parts of Bids 28
35. Evaluation of Financial Parts 28
36. Correction of Arithmetical Errors 29
37. Conversion to Single Currency 30
38. Margin of Preference 30
39. Comparison of Financial Parts 30
40. Abnormally Low Bids 30
41. Unbalanced or Front Loaded Bids 31
42. Most Advantageous Bid 31
43. Employer's Right to Accept Any Bid, and to Reject Any or All Bids 31
44. Standstill Period 31
45. Notification of Intention to Award 32

J. Award of Contract 32
46. Award Criteria 32
47. Notification of Award 32
48. Debriefing by the Employer 33
49. Signing of Contract 34
50. Performance Security 34
51. Adjudicator 35
52. Procurement Related Complaint 35

Section I - Instructions to Bidders

A. General

1. Scope of Bid

1.1 In connection with the Specific Procurement Notice – Request for Bids (RFB), specified in the **Bid Data Sheet (BDS)**, the Employer, as **specified in the BDS**, issues this bidding document for the provision of Works as specified in Section VII, Works' Requirements. The name, identification, and number of lots (contracts) of this RFB are **specified in the BDS.**

1.2 Throughout this bidding document:

- the term **"in writing"** means communicated in written form (e.g. by mail, e-mail, fax, including if **specified in the BDS**, distributed or received through electronic-procurement system used by the Employer) with proof of receipt;
- if the context so requires, **"singular"** means **"plural'** and vice versa;
- **"Day"** means calendar day, unless otherwise specified as a **"Business Day."** A Business Day is any day that is a working day of the Borrower. It excludes the Borrower's official public holidays;
- **"ES"** means environmental and social (including Sexual Exploitation and Abuse (SEA), and Sexual Harassment (SH));
- **"Sexual Exploitation and Abuse" "(SEA)"** means the following:

  "Sexual Exploitation" is defined as any actual or attempted abuse of position of vulnerability, differential power or trust, for sexual purposes, including, but not limited to, profiting monetarily, socially or politically from the sexual exploitation of another;

  "Sexual Abuse" is defined as the actual or threatened physical intrusion of a sexual nature, whether by force or under unequal or coercive conditions;
- **"Sexual Harassment" "(SH)"** is defined as unwelcome sexual advances, requests for sexual favors, and other verbal or physical conduct of a sexual nature by the Contractor's Personnel with other Contractor's or Employer's Personnel;

- **"Contractor's Personnel"** is as defined in Sub- Clause 1 (ii) of the General Conditions of Contract; and
- **"Employer's personnel"** is as defined in GCC Sub-Clause 1 (nn) of the General Conditions of Contract.

A non-exhaustive list of (i) behaviors which constitute SEA and (ii) behaviors which constitute SH is attached to the Code of Conduct form in Section IV.

2. Source of Funds

2.1 The Borrower or Recipient (hereinafter called "Borrower") **specified in the BDS** has received or has applied for financing (hereinafter called "funds") from the International Bank for Reconstruction and Development or the International Development Association (hereinafter called "the Bank") in an amount **specified in the BDS**, toward the project **named in the BDS**. The Borrower intends to apply a portion of the funds to eligible payments under the contract(s) for which this bidding document are issued.

2.2 Payment by the Bank will be made only at the request of the Borrower and upon approval by the Bank, and will be subject, in all respects, to the terms and conditions of the Loan (or other financing) Agreement. The Loan (or other financing) Agreement prohibits a withdrawal from the Loan account for the purpose of any payment to persons or entities, or for any import of goods, equipment, plant, or materials, if such payment or import is prohibited by a decision of the United Nations Security Council taken under Chapter VII of the Charter of the United Nations. No party other than the Borrower shall derive any rights from the Loan (or other financing) Agreement or have any claim to the proceeds of the Loan (or other financing).

3. Fraud and Corruption

3.1 The Bank requires compliance with the Bank's Anti-Corruption Guidelines and its prevailing sanctions policies and procedures as set forth in the WBG's Sanctions Framework, as set forth in Section VI.

3.2 In further pursuance of this policy, Bidders shall permit and shall cause their agents (where declared or not), subcontractors, subconsultants, service providers, suppliers, and personnel, to permit the Bank to inspect all accounts, records and other documents relating to any initial selection process, prequalification process, bid submission, proposal submission, and contract performance (in the case of award), and to have them audited by auditors appointed by the Bank.

4. Eligible Bidders

4.1 A Bidder may be a firm that is a private entity, or a state-owned enterprise or institution —subject to ITB 4.6—or any combination of them in the form of a joint venture (JV), under an existing agreement, or with the intent to enter into such an agreement supported by a letter of intent. In the case of a joint venture, all members shall be jointly and severally liable for the execution of the entire Contract in accordance with the Contract terms. The JV shall nominate a Representative who shall have the authority to conduct all business for and on behalf of any and all the members of the JV during the Bidding process and, in the event the JV is awarded the Contract, during contract execution. Unless **specified in the BDS**, there is no limit on the number of members in a JV.

4.2 A Bidder shall not have a conflict of interest. All Bidders found to have a conflict of interest shall be disqualified. A Bidder may be considered to have a conflict of interest for the purpose of this Bidding process, if the Bidder:

(a) directly or indirectly controls, is controlled by or is under common control with another Bidder; or

(b) receives or has received any direct or indirect subsidy from another Bidder; or

(c) has the same legal representative as another Bidder; or

(d) has a relationship with another Bidder, directly or through common third parties, that puts it in a position to influence the Bid of another Bidder, or influence the decisions of the Employer regarding this Bidding process; or

(e) or any of its affiliates participated as a consultant in the preparation of the design or technical specifications of the works that are the subject of the Bid; or

(f) or any of its affiliates has been hired (or is proposed to be hired) by the Employer or Borrower as Project Manager for the Contract implementation;

(g) would be providing goods, works, or non-consulting services resulting from or directly related to consulting services for the preparation or implementation of the project **specified in the BDS** 2.1 that it provided or were provided by any affiliate that directly or indirectly controls, is controlled by, or is under common control with that firm; or

(h) has a close business or family relationship with a professional staff of the Borrower (or of the project

implementing agency, or of a recipient of a part of the loan) who: (i) are directly or indirectly involved in the preparation of the bidding document or specifications of the contract, and/or the Bid evaluation process of such contract; or (ii) would be involved in the implementation or supervision of such contract unless the conflict stemming from such relationship has been resolved in a manner acceptable to the Bank throughout the procurement process and execution of the contract.

4.3 A firm that is a Bidder (either individually or as a JV member) shall not participate in more than one Bid, except for permitted alternative Bids. This includes participation as a subcontractor in other Bids. Such participation shall result in the disqualification of all Bids in which the firm is involved. A firm that is not a Bidder or a JV member may participate as a subcontractor in more than one Bid.

4.4 A Bidder may have the nationality of any country, subject to the restrictions pursuant to ITB 4.8. A Bidder shall be deemed to have the nationality of a country if the Bidder is constituted, incorporated or registered in and operates in conformity with the provisions of the laws of that country, as evidenced by its articles of incorporation (or equivalent documents of constitution or association) and its registration documents, as the case may be. This criterion also shall apply to the determination of the nationality of proposed subcontractors or subconsultants for any part of the Contract including related Services.

4.5 A Bidder that has been sanctioned by the Bank, pursuant to the Bank's Anti-Corruption Guidelines, in accordance with its prevailing sanctions policies and procedures as set forth in the WBG's Sanctions Framework as described in Section VI paragraph 2.2 d. shall be ineligible to be prequalified for, initially selected for, bid for, propose for, or be awarded a Bank-financed contract or benefit from a Bank-financed contract, financially or otherwise, during such period of time as the Bank shall have determined. The list of debarred firms and individuals is available at the electronic address specified in the BDS.

4.6 Bidders that are state-owned enterprises or institutions in the Employer's Country may be eligible to compete and be awarded a Contract(s) only if they can establish, in a manner acceptable to the Bank, that they (i) are legally and financially

autonomous (ii) operate under commercial law, and (iii) are not under supervision of the Employer.

4.7 A Bidder shall not be under suspension from Bidding by the Employer as the result of the operation of a Bid–Securing or Proposal-Securing Declaration.

4.8 Firms and individuals may be ineligible if so indicated in Section V and (a) as a matter of law or official regulations, the Borrower's country prohibits commercial relations with that country, provided that the Bank is satisfied that such exclusion does not preclude effective competition for the supply of goods or the contracting of works or services required; or (b) by an act of compliance with a decision of the United Nations Security Council taken under Chapter VII of the Charter of the United Nations, the Borrower's country prohibits any import of goods or contracting of works or services from that country, or any payments to any country, person, or entity in that country. When the Works are implemented across jurisdictional boundaries (and more than one country is a Borrower, and is involved in the procurement), then exclusion of a firm or individual on the basis of ITB 4.8 (a) above by any country may be applied to that procurement across other countries involved, if the Bank and the Borrowers involved in the procurement agree.

4.9 A Bidder shall provide such documentary evidence of eligibility satisfactory to the Employer, as the Employer shall reasonably request.

4.10 A firm that is under a sanction of debarment by the Borrower from being awarded a contract is eligible to participate in this procurement, unless the Bank, at the Borrower's request, is satisfied that the debarment;

- relates to fraud or corruption; and
- followed a judicial or administrative proceeding that afforded the firm adequate due process.

5. Eligible Materials, Equipment and Services

5.1 The materials, equipment and services to be supplied under the Contract and financed by the Bank may have their origin in any country subject to the restrictions specified in Section V, Eligible Countries, and all expenditures under the Contract will not contravene such restrictions. At the Employer's request, Bidders may be required to provide evidence of the origin of materials, equipment and services.

B. Contents of Bidding Document

6. Sections of Bidding Document

6.1 The bidding document consists of Parts 1, 2, and 3, which include all the sections specified below, and which should be read in conjunction with any Addenda issued in accordance with ITB 8.

PART 1 Bidding Procedures

(a) Section I - Instructions to Bidders (ITB)

(b) Section II - Bid Data Sheet (BDS)

(c) Section III - Evaluation and Qualification Criteria

(d) Section IV - Bidding Forms

(e) Section V - Eligible Countries

(f) Section VI - Fraud and Corruption

PART 2 Works' Requirements

(g) Section VII – Works' Requirements

PART 3 Conditions of Contract and Contract Forms

(h) Section VIII - General Conditions of Contract

(i) Section IX - Particular Conditions of Contract

(j) Section X - Contract Forms

6.2 The Specific Procurement Notice - Request for Bids (RFB) issued by the Employer is not part of this bidding document.

6.3 Unless obtained directly from the Employer, the Employer is not responsible for the completeness of the bidding document, responses to requests for clarification, the minutes of the pre-Bid meeting (if any), or Addenda to the bidding document in accordance with ITB 8. In case of any contradiction, documents obtained directly from the Employer shall prevail.

6.4 The Bidder is expected to examine all instructions, forms, terms, and specifications in the bidding document and to furnish with its Bid all information and documentation as is required by the bidding document.

7. Clarification of Bidding Document, Site

7.1 A Bidder requiring any clarification of the bidding document shall contact the Employer in writing at the Employer's address **specified in the BDS** or raise its inquiries during the pre-Bid meeting if provided for in accordance with ITB 7.4.

Visit, Pre-Bid Meeting

The Employer will respond in writing to any request for clarification, provided that such request is received prior to the deadline for submission of Bids within a period **specified in the BDS**. The Employer shall forward copies of its response to all Bidders who have acquired the bidding document in accordance with ITB 6.3, including a description of the inquiry but without identifying its source. If so **specified in the BDS**, the Employer shall also promptly publish its response at the web page **identified in the BDS**. Should the clarification result in changes to the essential elements of the bidding document, the Employer shall amend the bidding document following the procedure under ITB 8 and ITB 22.2.

7.2 The Bidder is advised to visit and examine the Site of works and its surroundings and obtain for itself on its own responsibility all information that may be necessary for preparing the Bid and entering into a contract for construction of the Works. The costs of visiting the Site shall be at the Bidder's own expense.

7.3 The Bidder and any of its personnel or agents will be granted permission by the Employer to enter upon its premises and lands for the purpose of such visit, but only upon the express condition that the Bidder, its personnel, and agents will release and indemnify the Employer and its personnel and agents from and against all liability in respect thereof, and will be responsible for death or personal injury, loss of or damage to property, and any other loss, damage, costs, and expenses incurred as a result of the inspection.

7.4 If so **specified in the BDS**, the Bidder's designated representative is invited to attend a pre-Bid meeting and/or a Site of works visit. The purpose of the meeting will be to clarify issues and to answer questions on any matter that may be raised at that stage.

7.5 The Bidder is requested, to submit any questions in writing, to reach the Employer not later than one week before the meeting.

7.6 Minutes of the pre-Bid meeting, if applicable, including the text of the questions asked by Bidders, without identifying the source, and the responses given, together with any responses prepared after the meeting, will be transmitted promptly to all Bidders who have acquired the bidding document in accordance with ITB 6.3. If so **specified in the BDS,** the Employer shall also promptly publish the Minutes of the pre-Bid meeting at the web page **identified in the BDS**. Any

modification to the bidding document that may become necessary as a result of the pre-Bid meeting shall be made by the Employer exclusively through the issue of an addendum pursuant to ITB 8 and not through the minutes of the pre-Bid meeting. Nonattendance at the pre-Bid meeting will not be a cause for disqualification of a Bidder.

8. Amendment of Bidding Document

8.1 At any time prior to the deadline for submission of Bids, the Employer may amend the bidding document by issuing addenda.

8.2 Any addendum issued shall be part of the bidding document and shall be communicated in writing to all who have obtained the bidding document from the Employer in accordance with ITB 6.3. The Employer shall also promptly publish the addendum on the Employer's web page in accordance with ITB 7.1.

8.3 To give prospective Bidders reasonable time in which to take an addendum into account in preparing their Bids, the Employer may, at its discretion, extend the deadline for the submission of Bids, pursuant to ITB 22.2.

C. Preparation of Bids

9. Cost of Bidding

9.1 The Bidder shall bear all costs associated with the preparation and submission of its Bid, and the Employer shall in no case be responsible or liable for those costs, regardless of the conduct or outcome of the Bidding process.

10. Language of Bid

10.1 The Bid, as well as all correspondence and documents relating to the Bid exchanged by the Bidder and the Employer, shall be written in the language **specified in the BDS**. Supporting documents and printed literature that are part of the Bid may be in another language provided they are accompanied by an accurate translation of the relevant passages in the language **specified in the BDS**, in which case, for purposes of interpretation of the Bid, such translation shall govern.

11. Documents Comprising the Bid

11.1 The Bid shall comprise two Parts, namely the Technical Part and the Financial Part. These two Parts shall be submitted simultaneously in two separate sealed envelopes (two-envelope Bidding process). One envelope shall contain only information relating to the Technical Part and the other, only information relating to the Financial Part. These two

envelopes shall be enclosed in a separate sealed outer envelope marked "ORIGINAL BID".

11.2 The **Technical Part** shall contain the following:

A. **Letter of Bid – Technical Part,** prepared in accordance with ITB 12;

B. **Bid Security** or **Bid-Securing Declaration**, in accordance with ITB 19.1;

C. **Alternative Bid - Technical Part**: if permissible in accordance with ITB 13, the Technical Part of any Alternative Bid;

D. **Authorization**: written confirmation authorizing the signatory of the Bid to commit the Bidder, in accordance with ITB 20.3;

E. **Bidder's Eligibility:** documentary evidence in accordance with ITB 17.1 establishing the Bidder's eligibility to Bid;

F. **Qualifications:** documentary evidence in accordance with ITB 17.2 establishing the Bidder's qualifications to perform the Contract if its Bid is accepted;

G. **Conformity**: a technical proposal in accordance with ITB 16; and

H. any other document **required in the BDS**.

11.3 The **Financial Part** shall contain the following:

(a) **Letter of Bid – Financial Part:** prepared in accordance with ITB 12 and ITB 14;

(b) **Bill of Quantities or Activity Schedule** completed in accordance with ITB 12 and ITB 14 as specified **in the BDS;**

(c) **Alternative Bid - Financial Part:** if permissible in accordance with ITB 13, the Financial Part of any Alternative Bid; and

(d) any other document required **in the BDS.**

11.4 The Technical Part shall not include any information related to the Bid price. Where material financial information related to the Bid price is contained in the Technical Part the Bid shall be declared non-responsive.

11.5 In addition to the requirements under ITB 11.2, Bids submitted by a JV shall include a copy of the Joint Venture Agreement entered into by all members. Alternatively, a letter of intent to execute a Joint Venture Agreement in the event of a successful Bid shall be signed by all members and submitted with the Bid, together with a copy of the proposed Agreement.

11.6 The Bidder shall furnish in the Letter of Bid – Financial Part information on commissions and gratuities, if any, paid or to be paid to agents or any other party relating to this Bid.

12. Letters of Bid and Schedules

12.1 The Letter of Bid – Technical Part, Letter of Bid – Financial Part and Priced Activity Schedules or Bill of Quantities shall be prepared using the relevant forms furnished in Section IV, Bidding Forms. The forms must be completed without any alterations to the text, and no substitutes shall be accepted except as provided under ITB 20.3. All blank spaces shall be filled in with the information requested.

13. Alternative Bids

13.1 Unless otherwise **specified in the BDS**, alternative Bids shall not be considered.

13.2 When alternative times for completion are explicitly invited, a statement to that effect will be **included in the BDS**, and the method of evaluating different alternative times for completion will be described in Section III, Evaluation and Qualification Criteria.

13.3 Except as provided under ITB 13.4 below, Bidders wishing to offer technical alternatives to the requirements of the bidding document must first price the Employer's design as described in the bidding document and shall further provide all information necessary for a complete evaluation of the alternative by the Employer, including drawings, design calculations, technical specifications, breakdown of prices, and proposed construction methodology and other relevant details. Only the technical alternatives, if any, of the Bidder with the Most Advantageous Bid conforming to the basic technical requirements shall be considered by the Employer.

13.4 When **specified in the BDS**, Bidders are permitted to submit alternative technical solutions for specified parts of the Works. Such parts will be **identified in the BDS** and described in Section VII, Works' Requirements. The method for their evaluation will be stipulated in Section III, Evaluation and Qualification Criteria.

14. Bid Prices and Discounts

14.1 The prices and discounts quoted by the Bidder in the Letter of Bid – Financial Part and in the Priced Activity Schedule or Bill of Quantities shall conform to the requirements specified below.

14.2 The Bidder shall submit a Bid for the whole of the Works described in ITB 1.1 by filling in prices for all items of the Works, as identified in Section IV, Bidding Forms. In case of admeasurement contracts, the Bidder shall fill in rates and prices for all items of the Works described in the Bill of Quantities. Items against which no rate or price is entered by the Bidder will not be paid for by the Employer when executed and shall be deemed covered by the rates for other items and prices in the Bill of Quantities.

14.3 The price to be quoted in the Letter of Bid – Financial Part, in accordance with ITB 12.1, shall be the total price of the Bid, excluding any discounts offered.

14.4 The Bidder shall quote any discounts and indicate the methodology for their application in the Letter of Bid - Financial Part, in accordance with ITB 12.1.

14.5 Unless otherwise **provided in the BDS,** and the Conditions of Contract, th**e** prices quoted by the Bidder shall be fixed. If the prices quoted by the Bidder are subject to adjustment during the performance of the Contract in accordance with the provisions of the Conditions of Contract, the Bidder shall furnish the indices and weightings for the price adjustment formulae in the Schedule of Adjustment Data in Section IV-Bidding Forms and the Employer may require the Bidder to justify its proposed indices and weightings.

14.6 If so specified in ITB 1.1, Bids are invited for individual lots (contracts) or for any combination of lots (packages). Bidders wishing to offer discounts for the award of more than one Contract shall specify in their Bid the price reductions applicable to each package, or alternatively, to individual Contracts within the package. Discounts shall be submitted in accordance with ITB 14.4, provided the Bids for all lots (contracts) are opened at the same time.

14.7 All duties, taxes, and other levies payable by the Contractor under the Contract, or for any other cause, as of the date 28 days prior to the deadline for submission of Bids, shall be

included in the rates and prices[1] and the total Bid price submitted by the Bidder.

15. Currencies of Bid and Payment

15.1 The currency(ies) of the Bid and the currency(ies) of payments shall be the same and shall be as **specified in the BDS.**

15.2 Bidders may be required by the Employer to justify, to the Employer's satisfaction, their local and foreign currency requirements, and to substantiate that the amounts included in the unit rates and prices and shown in the Schedule of Adjustment Data are reasonable[2], in which case a detailed breakdown of the foreign currency requirements shall be provided by Bidders.

16. Documents Comprising the Technical Proposal

16.1 The Bidder shall furnish a technical proposal in the Technical Part of the Bid including a statement of work methods, equipment, personnel, schedule and any other information as stipulated in Section IV, Bidding Forms, in sufficient detail to demonstrate the adequacy of the Bidders' proposal to meet the work's requirements and the completion time.

17. Documents Establishing the Eligibility and Qualifications of the Bidder

17.1 To establish Bidder's eligibility in accordance with ITB 4, Bidders shall complete the Letter of Bid, – Technical Part, included in Section IV, Bidding Forms.

17.2 In accordance with Section III, Evaluation and Qualification Criteria, to establish its qualifications to perform the Contract, the Bidder shall provide the information requested in the corresponding information sheets included in Section IV, Bidding Forms.

17.3 If a margin of preference applies as specified in accordance with ITB 38.1, domestic Bidders, individually or in joint ventures, applying for eligibility for domestic preference shall supply all information required to satisfy the criteria for eligibility specified in accordance with ITB 38.1.

18. Period of Validity of Bids

18.1 Bids shall remain valid until the date specified **in the BDS** or any extended date if amended by the Employer in accordance with ITB 8. A Bid that is not valid until the date specified **in the BDS,** or any extended date if amended by the Employer in accordance with ITB 8, shall be rejected by the Employer as nonresponsive.

---

[1] In lump-sum contracts, delete "rates and prices and the."

[2] For lump-sum contracts, delete "unit rates and prices and shown in the Schedule of Adjustment Data are reasonable" and replace with "Lump-sum."

18.2 In exceptional circumstances, prior to the date of expiry of the Bid validity, the Employer may request Bidders to extend the period of validity of their Bids. The request and the responses shall be made in writing. If a Bid Security is requested in accordance with ITB 19, it shall also be extended for twenty-eight (28) days beyond the extended date for Bid validity. A Bidder may refuse the request without forfeiting its Bid Security. A Bidder granting the request shall not be required or permitted to modify its Bid, except as provided in ITB 18.3.

18.3 If the award is delayed by a period exceeding fifty-six (56) days beyond the date of expiry of the Bid validity specified in accordance with ITB 18.1, the Contract price shall be determined as follows:

(a) in **the** case of fixed price contracts, the Contract price shall be the Bid price adjusted by the factor **specified in the BDS;**

(b) in the case of adjustable price contracts, no adjustment shall be made; or

(c) in any case, Bid evaluation shall be based on the Bid price without taking into consideration the applicable correction from those indicated above.

19. Bid Security

19.1 The Bidder shall furnish as part of its Technical Part of its Bid, either a Bid-Securing Declaration or a Bid Security as **specified in the BDS**, in original form and, in the case of a Bid security, in the amount and currency **specified in the BDS**.

19.2 A Bid-Securing Declaration shall use the form included in Section IV, Bidding Forms.

19.3 If a Bid Security is specified pursuant to ITB 19.1, the Bid Security shall be a demand guarantee, and in any of the following forms at the Bidder's option:

(a) an unconditional guarantee issued by a bank or non-bank financial institution (such as an insurance, bonding or surety company);

(b) an irrevocable letter of credit;

(c) a cashier's or certified check; or

(d) another security **specified in the BDS,**

from a reputable source, and an eligible country. If an unconditional guarantee is issued by a non-bank financial

institution located outside the Employer's Country, the issuing non-bank financial institution shall have a correspondent financial institution located in the Employer's Country to make it enforceable unless the Employer has agreed in writing, prior to Bid submission, that a correspondent financial institution is not required. In the case of a bank guarantee, the Bid Security shall be submitted either using the Bid Security Form included in Section IV, Bidding Forms, or in another substantially similar format approved by the Employer prior to Bid submission. The Bid Security shall be valid for twenty-eight (28) days beyond the original date of expiry of the Bid validity, or beyond any extended date if requested under ITB 18.2.

19.4 If a Bid Security or Bid-Securing Declaration is specified pursuant to ITB 19.1, any Bid not accompanied by a substantially responsive Bid Security or Bid-Securing Declaration shall be rejected by the Employer as non-responsive.

19.5 If a Bid Security is specified pursuant to ITB 19.1, the Bid Security of unsuccessful Bidders shall be returned as promptly as possible upon the successful Bidder's signing the Contract and furnishing the Performance Security and if required in the BDS, the Environmental and Social (ES) Performance Security pursuant to ITB 50.

19.6 The Bid Security of the successful Bidder shall be returned as promptly as possible once the successful Bidder has signed the Contract and furnished the required Performance Security and if required in the BDS, the Environmental and Social (ES) Performance Security.

19.7 The Bid Security may be forfeited:

(a) if a Bidder withdraws its Bid prior to the expiry date of the Bid validity specified by the Bidder on the Letter of Bid – Technical Part and repeated in the Letter of Bid – Financial Part or any extension thereto provided by the Bidder; or

(b) if the successful Bidder fails to:

a. sign the Contract in accordance with ITB 49; or
b. furnish a Performance Security and if required in the BDS, the Environmental and Social (ES) Performance Security in accordance with ITB 50.

19.8 The Bid Security or the Bid-Securing Declaration of a JV shall be in the name of the JV that submits the Bid. If the JV has not been constituted into a legally enforceable JV, at the time

of Bidding, the Bid Security or the Bid-Securing Declaration shall be in the names of all future members as named in the letter of intent mentioned in ITB 4.1 and ITB 11.5.

19.9 If a Bid Security is not required in the BDS, pursuant to ITB 19.1, and:

(a) if a Bidder withdraws its Bid prior to the expiry date of the Bid validity specified by the Bidder on the Letters of Bid or any extended date provided by the Bidder; or

(b) if the successful Bidder fails to:

- sign the Contract in accordance with ITB 49; or
- furnish a Performance Security and if required in the BDS, the Environmental, and Social (ES) Performance Security in accordance with ITB 50;

the Borrower may, if provided for **in the BDS**, declare the Bidder ineligible to be awarded a contract by the Employer for a period of time as **stated in the BDS**.

20. Format and Signing of Bid

20.1 The Bidder shall prepare the Bid, in accordance with this Instruction, ITB 11 and ITB 21.

20.2 Bidders shall mark as "CONFIDENTIAL" information in their Bids which is confidential to their business. This may include proprietary information, trade secrets or commercial or financially sensitive information.

20.3 The original and all copies of the Bid shall be typed or written in indelible ink and shall be signed by a person duly authorized to sign on behalf of the Bidder. This authorization shall consist of a written confirmation as **specified in the BDS** and shall be attached to the Bid. The name and position held by each person signing the authorization must be typed or printed below the signature. All pages of the Bid where entries or amendments have been made shall be signed or initialed by the person signing the Bid.

20.4 In case the Bidder is a JV, the Bid shall be signed by an authorized representative of the JV on behalf of the JV, and so as to be legally binding on all the members as evidenced by a power of attorney signed by their legally authorized representatives.

20.5 Any interlineations, erasures, or overwriting shall be valid only if they are signed or initialed by the person signing the Bid.

D. Submission of Bids

21. Sealing and Marking of Bids

21.1 The Bidder shall deliver the Bid in two separate, sealed envelopes (the Technical Part and the Financial Part.) These two envelopes shall be enclosed in a separate sealed outer envelope marked "ORIGINAL BID".

21.2 In addition, the Bidder shall submit copies of the Bid in the number **specified in the BDS**. Copies of the Technical Part shall be placed in a separate sealed envelope marked "COPIES: TECHNICAL PART". Copies of the Financial Part shall be placed in a separate sealed envelope marked "COPIES: FINANCIAL PART". The Bidder shall place both of these envelopes in a separate, sealed outer envelope marked "BID COPIES". In the event of any discrepancy between the original and the copies, the original shall prevail. If alternative Bids are permitted in accordance with ITB 13, the alternative Bids shall be submitted as follows: the original of the alternative Bid Technical Part shall be placed in a sealed envelope marked "ALTERNATIVE BID – TECHNICAL PART" and the Financial Part shall be placed in a sealed envelope marked "ALTERNATIVE BID – FINANCIAL PART" and these two separate sealed envelopes then enclosed within a sealed outer envelope marked "ALTERNATIVE BID – ORIGINAL", the copies of the alternative Bid will be placed in separate sealed envelopes marked "ALTERNATIVE BID – COPIES OF TECHNICAL PART", and "ALTERNATIVE BID – COPIES OF FINANCIAL PART" and enclosed in a separate sealed outer envelope marked "ALTERNATIVE BID - COPIES"

21.3 The envelopes marked "ORIGINAL BID" and "BID COPIES" (and, if appropriate, a third envelope marked "ALTERNATIVE BID") shall be enclosed in a separate sealed outer envelope for submission to the Employer.

21.4 All inner and outer envelopes, shall:

(a) bear the name and address of the Bidder;

(b) be addressed to the Employer in accordance with ITB 22.1;

(c) bear the specific identification of this Bidding process indicated in ITB 1.1; and

(d) bear a warning not to open before the time and date for Bid opening.

21.5 If all envelopes are not sealed and marked as required, the Employer will assume no responsibility for the misplacement or premature opening of the Bid.

22. Deadline for Submission of Bids

22.1 Bids must be received by the Employer at the address and no later than the date and time **specified in the BDS**. When so **specified in the BDS**, Bidders shall have the option of submitting their Bids electronically. Bidders submitting Bids electronically shall follow the electronic Bid submission procedures **specified in the BDS.**

22.2 The Employer may, at its discretion, extend the deadline for the submission of Bids by amending the bidding document in accordance with ITB 8, in which case all rights and obligations of the Employer and Bidders previously subject to the deadline shall thereafter be subject to the deadline as extended.

23. Late Bids

23.1 The Employer shall not consider any Bid that arrives after the deadline for submission of Bids, in accordance with ITB 22. Any Bid received by the Employer after the deadline for submission of Bids shall be declared late, rejected, and returned unopened to the Bidder.

24. Withdrawal, Substitution, and Modification of Bids

24.1 A Bidder may withdraw, substitute, or modify its Bid after it has been submitted by sending a written notice, duly signed by an authorized representative, and shall include a copy of the authorization in accordance with ITB 20.3, (except that withdrawal notices do not require copies). The corresponding substitution or modification of the Bid must accompany the respective written notice. All notices must be:

(a) prepared and submitted in accordance with ITB 20 and ITB 21 (except that withdrawal notices do not require copies), and in addition, the respective envelopes shall be clearly marked "WITHDRAWAL," "SUBSTITUTION," "MODIFICATION;" and

(b) received by the Employer prior to the deadline prescribed for submission of Bids, in accordance with ITB 22.

24.2 Bids requested to be withdrawn in accordance with ITB 24.1 shall be returned unopened to the Bidders.

24.3 No Bid may be withdrawn, substituted, or modified in the interval between the deadline for submission of Bids and the date of expiry of the Bid validity specified by the Bidder on the Letter of Bid or any extended date thereof.

E. Public Opening of Technical Parts of Bids

25. Public Opening of Technical Parts of Bids

25.1 Except in the cases specified in ITB 23 and ITB 24.2, the Employer shall publicly open and read out all Bids received by the deadline, at the date, time and place **specified in the BDS**, in the presence of Bidders` designated representatives and anyone who chooses to attend. All Bidders, or their representatives and any interested party may attend a public opening. Any specific electronic Bid opening procedures required if electronic bidding is permitted in accordance with ITB 22.1, shall be as **specified in the BDS**.

25.2 First, the written notice of withdrawal in the envelopes marked "WITHDRAWAL" shall be opened and read out and the envelope with the corresponding Bid shall not be opened, but returned to the Bidder. No Bid withdrawal shall be permitted unless the corresponding withdrawal notice contains a valid authorization to request the withdrawal and is read out at Bid opening.

25.3 Next, envelopes marked "Substitution" shall be opened and read out and exchanged with the corresponding Bid being substituted, and the substituted Bid shall not be opened, but returned to the Bidder. No Bid substitution shall be permitted unless the corresponding substitution notice contains a valid authorization to request the substitution and is read out at Bid opening.

25.4 Next, envelopes marked "MODIFICATION" shall be opened and read out with the corresponding Bid. No Bid modification shall be permitted unless the corresponding modification notice contains a valid authorization to request the modification and is read out at Bid opening.

25.5 Next, all other envelopes marked "TECHNICAL PART" shall be opened one at a time. All envelopes marked "SECOND ENVELOPE: FINANCIAL PART" shall remain sealed, and kept by the Employer in safe custody until they are opened, at a later public opening, following the evaluation of the Technical Part parts of the Bids. On opening the envelopes marked "TECHNICAL PART" the Employer shall read out: the name of the Bidder, the presence or the absence of a Bid Security, or Bid-Securing Declaration, if required, and whether there is a modification; and Alternative Bid - Technical Part; and any other details as the Employer may consider appropriate.

25.6 Only Technical Parts of Bids and Alternative Bid - Technical Parts that are read out at Bid opening shall be considered further for evaluation. The Letter of Bid- Technical Part and the separate sealed envelope marked "SECOND ENVELOPE: FINANCIAL PART" are to be initialed by representatives of the Employer attending Bid opening in the manner **specified in the BDS**.

25.7 At the Bid opening the Employer shall neither discuss the merits of any Bid nor reject any Bid (except for late Bids, in accordance with ITB 23.1).

25.8 The Employer shall prepare a record of the Technical Parts of Bid opening that shall include, as a minimum:

(a) the name of the Bidder and whether there is a withdrawal, substitution, or modification;

(b) the receipt of envelopes marked "SECOND ENVELOPE: FINANCIAL PART";

(c) the presence or absence of a Bid Security or Bid-Securing Declaration, if one was required; and

(d) if applicable, any Alternative Bid – Technical Part.

25.9 The Bidders' representatives who are present shall be requested to sign the record. The omission of a Bidder's signature on the record shall not invalidate the contents and effect of the record. A copy of the record shall be distributed to all Bidders.

F. Evaluation of Bids – General Provisions

26. Confidentiality

26.1 Information relating to the evaluation of Bids and recommendation of contract award, shall not be disclosed to Bidders or any other persons not officially concerned with the Bidding process until information on Intention to Award the Contract is transmitted to all Bidders in accordance with ITB 44.

26.2 Any effort by a Bidder to influence the Employer in the evaluation of the Bids or Contract award decisions may result in the rejection of its Bid.

26.3 Notwithstanding ITB 26.2, from the time of Bid opening to the time of Contract award, if a Bidder wishes to contact the

Employer on any matter related to the Bidding process, it shall do so in writing.

27. Clarification of Bids

27.1 To assist in the examination, evaluation, and comparison of the Bids, and qualification of the Bidders, the Employer may, at its discretion, ask any Bidder for a clarification of its Bid given a reasonable time for a response. Any clarification submitted by a Bidder that is not in response to a request by the Employer shall not be considered. The Employer's request for clarification and the response shall be in writing. No change, including any voluntary increase or decrease in the prices or substance of the Bid shall be sought, offered, or permitted, except to confirm the correction of arithmetic errors discovered by the Employer in the evaluation of the Bids, in accordance with ITB 36.

27.2 If a Bidder does not provide clarifications of its Bid by the date and time set in the Employer's request for clarification, its Bid may be rejected.

28. Deviations, Reservations, and Omissions

28.1 During the evaluation of Bids, the following definitions apply:

(a) "Deviation" is a departure from the requirements specified in the bidding document;

(b) "Reservation" is the setting of limiting conditions or withholding from complete acceptance of the requirements specified in the bidding document; and

(c) "Omission" is the failure to submit part or all of the information or documentation required in the bidding document.

29. Nonmaterial Nonconformities

29.1 Provided that a Bid is substantially responsive, the Employer may waive any nonconformities in the Bid.

29.2 Provided that a Bid is substantially responsive, the Employer may request that the Bidder submit the necessary information or documentation, within a reasonable period of time, to rectify nonmaterial nonconformities in the Bid related to documentation requirements. Requesting information or documentation on such nonconformities shall not be related to any aspect of the price of the Bid. Failure of the Bidder to comply with the request may result in the rejection of its Bid.

29.3 Provided that a Bid is substantially responsive pursuant to ITB 31, the Employer shall rectify quantifiable nonmaterial nonconformities related to the Bid price. To this effect, the Bid Price shall be adjusted, for comparison purposes only to

reflect the price of a missing or non-conforming item or component, by adding the average price of the item or component quoted by substantially responsive Bidders. If the price of the item or component cannot be derived from the price of other substantially responsive Bids, the Employer shall use its best estimate.

G. Evaluation of Technical Parts of Bids

30. Evaluation of Technical Parts

30.1 In evaluating the Technical Parts of each Bid, the Employer shall use the criteria and methodologies listed in this ITB and Section III, Evaluation and Qualification Criteria. No other evaluation criteria or methodologies shall be permitted.

31. Determination of Responsiveness

31.1 The Employer's determination of a Bid's responsiveness is to be based on the contents of the Bid itself, as defined in ITB 11.

31.2 A substantially responsive Bid is one that meets the requirements of the bidding document without material deviation, reservation, or omission. A material deviation, reservation, or omission is one that:

(a) if accepted, would:

(i) affect in any substantial way the scope, quality, or performance of the Works specified in the Contract; or

(ii) limit in any substantial way, inconsistent with the bidding document, the Employer's rights or the Bidder's obligations under the proposed Contract; or

(b) if rectified, would unfairly affect the competitive position of other Bidders presenting substantially responsive Bids.

31.3 The Employer shall examine the technical aspects of the Bid submitted in accordance with ITB 16, in particular, to confirm that all requirements of Section VII, Works' Requirements have been met without any material deviation, reservation or omission.

31.4 If a Bid is not substantially responsive to the requirements of the bidding document, it shall be rejected by the Employer and may not subsequently be made responsive by correction of the material deviation, reservation, or omission.

32. Qualification of the Bidder

32.1 The Employer shall determine to its satisfaction whether the eligible Bidders that have submitted substantially responsive Bid - Technical Parts meet the qualifying criteria specified in Section III, Evaluation and Qualification Criteria.

32.2 The determination shall be based upon an examination of the documentary evidence of the Bidder's qualifications submitted by the Bidder, pursuant to ITB 17. The determination shall not take into consideration the qualifications of other firms such as the Bidder's subsidiaries, parent entities, affiliates, subcontractors (other than Specialized Subcontractors if permitted in the bidding document), or any other firm different from the Bidder.

32.3 If a Bidder does not meet the qualifying criteria specified in Section III, Evaluation and Qualification Criteria, its Bid shall be rejected by the Employer and may not subsequently be made responsive by correction of the material deviation, reservation, or omission.

32.4 Only Bids that are both substantially responsive to the bidding document, and meet all Qualification Criteria shall have their envelopes marked "SECOND ENVELOPE: FINANCIAL PART" opened at the second public opening.

33. Subcontractors

33.1 Unless otherwise stated **in the BDS**, the Employer does not intend to execute any specific elements of the Works by subcontractors selected in advance by the Employer.

33.2 The subcontractor's qualifications shall not be used by the Bidder to qualify for the Works unless their specialized parts of the Works were previously designated by the Employer **in the BDS** as can be met by subcontractors referred to hereafter as 'Specialized Subcontractors', in which case, the qualifications of the Specialized Subcontractors proposed by the Bidder may be added to the qualifications.

33.3 Bidders may propose subcontracting up to the percentage of total value of contracts or the volume of works as **specified in the BDS.** Subcontractors proposed by the Bidder shall be fully qualified for their parts of the Works.

H. Public Opening of Financial Parts of Bids

34. Public Opening of Financial Parts

34.1 Following the completion of the evaluation of the Technical Parts of the Bids, and the Bank has issued its no objection (if applicable), the Employer shall notify in writing those Bidders

whose Bids were considered non-responsive to the bidding document or failed to meet the Qualification Criteria, advising them of the following information:

(a) the grounds on which their Technical Part of Bid failed to meet the requirements of the bidding document;

(b) their envelopes marked "SECOND ENVELOPE: FINANCIAL PART" will be returned to them unopened after the completion of the selection process and the signing of the Contract; and

(c) notify them of the date, time and location of the public opening of the envelopes marked "SECOND ENVELOPE: FINANCIAL PART".

34.2 The Employer shall, simultaneously, notify in writing those Bidders whose Technical Part have been evaluated as substantially responsive to the bidding document and met all Qualifying Criteria, advising them of the following information:

(a) their Bid has been evaluated as substantially responsive to the bidding document and met the Qualification Criteria;

(b) their envelope marked "SECOND ENVELOPE: FINANCIAL PART" will be opened at the public opening of the Financial Parts; and

(c) notify them of the date, time and location of the second public opening of the envelopes marked "SECOND ENVELOPE: FINANCIAL PART" **as specified in the BDS.**

34.3 The opening date should allow Bidders sufficient time to make arrangements for attending the opening. The Financial Part of the Bid shall be opened publicly in the presence of Bidders' designated representatives and anyone who chooses to attend.

34.4 At this public opening the Financial Parts will be opened by the Employer in the presence of Bidders, or their designated representatives and anyone else who chooses to attend. Bidders who met the Qualification Criteria and whose bids were evaluated as substantially responsive will have their envelopes marked "SECOND ENVELOPE: FINANCIAL PART" opened at the second public opening. Each of these envelopes marked "SECOND ENVELOPE: FINANCIAL PART" shall be inspected to confirm that they have remained sealed and unopened. These envelopes shall then be opened by the

Employer. The Employer shall read out the names of each Bidder, and the total Bid prices, per lot (contract) if applicable, including any discounts and Alternative Bid - Financial Part, and any other details as the Employer may consider appropriate.

34.5 Only envelopes of Financial Part of Bids, Financial Parts of Alternative Bids and discounts that are opened and read out at Bid opening shall be considered further for evaluation. The Letter of Bid – Financial Part and the Priced Activity Schedules are to be initialed by a representative of the Employer attending the Bid opening in the manner **specified in the BDS**.

34.6 The Employer shall neither discuss the merits of any Bid nor reject any envelopes marked "SECOND ENVELOPE: FINANCIAL PART".

34.7 The Employer shall prepare a record of the Financial Part of the Bid opening that shall include, as a minimum:

(a) the name of the Bidder whose Financial Part was opened;

(b) the Bid price, per lot (contract) if applicable, including any discounts; and

(c) if applicable, any Alternative Bid – Financial Part.

34.8 The Bidders whose envelopes marked "SECOND ENVELOPE: FINANCIAL PART" have been opened or their representatives who are present shall be requested to sign the record. The omission of a Bidder's signature on the record shall not invalidate the contents and effect of the record. A copy of the record shall be distributed to all Bidders.

I. Evaluation of Financial Parts of Bids

35. Evaluation of Financial Parts

35.1 To evaluate the Financial Part, the Employer shall consider the following:

(a) the Bid price, excluding Provisional Sums and the provision, if any, for contingencies in the Summary Bill of Quantities for admeasurement contracts, but including Daywork items, where priced competitively;

(b) price adjustment for correction of arithmetic errors in accordance with ITB 36.1;

(c) price adjustment due to discounts offered in accordance with ITB 14.4;

(d) converting the amount resulting from applying (a) to (c) above, if relevant, to a single currency in accordance with ITB 37;

(e) price adjustment due to quantifiable nonmaterial nonconformities in accordance with ITB 29.3; and

(f) the additional evaluation factors are specified in Section III, Evaluation and Qualification Criteria.

35.2 The estimated effect of the price adjustment provisions of the Conditions of Contract, applied over the period of execution of the Contract, shall not be taken into account in Bid evaluation.

35.3 If this bidding document allows Bidders to quote separate prices for different lots (contracts), the methodology to determine the lowest evaluated cost of the contract combinations, including any discounts offered in the Letter of Bid – Financial Part, is specified in Section III, Evaluation and Qualification Criteria

36. Correction of Arithmetical Errors

36.1 In evaluating the Financial Part of each Bid, the Employer shall correct arithmetical errors on the following basis:

(a) only for admeasurement contracts, if there is a discrepancy between the unit price and the total price that is obtained by multiplying the unit price and quantity, the unit price shall prevail and the total price shall be corrected, unless in the opinion of the Employer there is an obvious misplacement of the decimal point in the unit price, in which case the total price as quoted shall govern and the unit price shall be corrected;

(b) if there is an error in a total corresponding to the addition or subtraction of subtotals, the subtotals shall prevail and the total shall be corrected; and

(c) if there is a discrepancy between words and figures, the amount in words shall prevail, unless the amount expressed

in words is related to an arithmetic error, in which case the amount in figures shall prevail subject to (a) and (b) above.

36.2 Bidders shall be requested to accept correction of arithmetical errors. Failure to accept the correction in accordance with ITB 36.1, shall result in the rejection of the Bid.

37. Conversion to Single Currency

37.1 For evaluation and comparison purposes, the currency(ies) of the Bids shall be converted in a single currency as **specified in the BDS.**

38. Margin of Preference

38.1 Unless otherwise **specified in the BDS,** a margin of preference for domestic Bidders[3] shall not apply.

39. Comparison of Financial Parts

39.1 The Employer shall compare the evaluated costs of all responsive and qualified Bids to determine the Bid that has the lowest evaluated cost.

40. Abnormally Low Bids

40.1 An Abnormally Low Bid is one where the Bid price, in combination with other constituent elements of the Bid, appears unreasonably low to the extent that the Bid price raises material concerns as to the capability of the Bidder to perform the Contract for the offered Bid price.

40.2 In the event of identification of a potentially Abnormally Low Bid, the Employer shall seek written clarifications from the Bidder, including detailed price analyses of its Bid price in correlation to the subject matter of the contract, scope, proposed methodology, schedule, allocation of risks and responsibilities and any other requirements of the bidding document.

40.3 After evaluation of the price analyses, in the event that the Employer determines that the Bidder has failed to demonstrate its capability to deliver the contract for the offered tender price, the Employer shall reject the Bid.

[3] An individual firm is considered a domestic bidder for purposes of the margin of preference if it is registered in the country of the Employer, has more than 50 percent ownership by nationals of the country of the Employer, and if it does not subcontract more than 10 percent of the contract price, excluding provisional sums, to foreign contractors. JVs are considered as domestic bidders and eligible for domestic preference only if the individual member firms are registered in the country of the Employer or have more than 50 percent ownership by nationals of the country of the Employer, and the JV shall be registered in the country of the Borrower. The JV shall not subcontract more than 10 percent of the contract price, excluding provisional sums, to foreign firms. JVs between foreign and national firms will not be eligible for domestic preference.

41. Unbalanced or Front Loaded Bids

41.1 If the Bid for an admeasurement contract, which results in the lowest evaluated cost, in the Employer's opinion, seriously unbalanced or front loaded the Employer may require the Bidder to provide written clarifications. Clarifications may include detailed price analyses to demonstrate the consistency of the Bid prices with the scope of works, proposed methodology, schedule and any other requirements of the bidding document.

41.2 After the evaluation of the information and detailed price analyses presented by the Bidder, the Employer may as appropriate:

(a) accept the Bid; or

(b) require that the amount of the performance security be increased at the expense of the Bidder to a level not exceeding 20% of the Contract price; or

(c) reject the Bid.

42. Most Advantageous Bid

42.1 Having compared the evaluated costs of Bids, the Employer shall determine the Most Advantageous Bid. The Most Advantageous Bid is the Bid of the Bidder that meets the Qualification Criteria and whose Bid has been determined to be:

(a) substantially responsive to the bidding document; and

(b) the lowest evaluated cost.

43. Employer's Right to Accept Any Bid, and to Reject Any or All Bids

43.1 The Employer reserves the right to accept or reject any Bid, and to annul the Bidding process and reject all Bids at any time prior to Contract Award, without thereby incurring any liability to Bidders. In case of annulment, all Bids submitted and specifically, Bid Securities, shall be promptly returned to the Bidders.

44. Standstill Period

44.1 The Contract shall not be awarded earlier than the expiry of the Standstill Period. The Standstill Period shall be ten (10) Business Days unless extended in accordance with ITB 48. The Standstill Period commences the day after the date the Employer has transmitted to each Bidder the Notification of Intention to Award the Contract. Where only one Bid is submitted, or if this contract is in response to an emergency situation recognized by the Bank, the Standstill Period shall not apply.

45. Notification of Intention to Award

45.1 The Employer shall send to each Bidder (that has not already been notified that it has been unsuccessful) the Notification of Intention to Award the Contract to the successful Bidder. The Notification of Intention to Award shall contain, at a minimum, the following information:

(a) the name and address of the Bidder submitting the successful Bid;

(b) the Contract price of the successful Bid;

(c) the names of all Bidders who submitted Bids, and their Bid prices as readout, and as evaluated;

(d) a statement of the reason(s) the Bid (of the unsuccessful Bidder to whom the notification is addressed) was unsuccessful, unless the price information in c) above already reveals the reason;

(e) the expiry date of the Standstill Period; and

(f) instructions on how to request a debriefing and/or submit a complaint during the standstill period.

J. Award of Contract

46. Award Criteria

46.1 Subject to ITB 43, the Employer shall award the Contract to the successful Bidder. This is the Bidder whose Bid has been determined to be the Most Advantageous Bid as specified in ITB 42.

47. Notification of Award

47.1 Prior to the expiration of the Bid validity and upon expiry of the Standstill Period, specified in ITB 44.1 or any extension thereof, and, upon satisfactorily addressing any complaint that has been filed within the Standstill Period, the Employer shall notify the successful Bidder, in writing, that its Bid has been accepted. The notification of award (hereinafter and in the Conditions of Contract and Contract Forms called the "Letter of Acceptance") shall specify the sum that the Employer will pay the Contractor in consideration of the execution of the contract (hereinafter, and in the Conditions of Contract and Contract Forms, called "the Contract Price").

47.2 Within ten (10) Business Days after the date of transmission of the Letter of Acceptance, the Employer shall publish the Contract Award Notice which shall contain, at a minimum, the following information:

(a) name and address of the Employer;

(b) name and reference number of the contract being awarded, and the selection method used;

(c) names of all Bidders that submitted Bids, and their Bid prices as read out at Bid opening, and as evaluated;

(d) names of all Bidders whose Bids were rejected either as nonresponsive or as not meeting qualification criteria, or were not evaluated, with the reasons therefor;

(e) the name of the successful Bidder, the final total contract price, the contract duration and a summary of its scope; and

(f) successful Bidder's Beneficial Ownership Disclosure Form, if specified in BDS ITB 49.1

47.3 The Contract Award Notice shall be published on the Employer's website with free access if available, or in at least one newspaper of national circulation in the Employer's country, or in the official gazette. The Employer shall also publish the contract award notice in UNDB online.

47.4 Until a formal Contract is prepared and executed, the Letter of Acceptance shall constitute a binding Contract.

48. Debriefing by the Employer

48.1 On receipt of the Employer's Notification of Intention to Award referred to in ITB 45.1, an unsuccessful Bidder has three (3) Business Days to make a written request to the Employer for a debriefing. The Employer shall provide a debriefing to all unsuccessful Bidders whose request is received within this deadline.

48.2 Where a request for debriefing is received within the deadline, the Employer shall provide a debriefing within five (5) Business Days, unless the Employer decides, for justifiable reasons, to provide the debriefing outside this timeframe. In that case, the standstill period shall automatically be extended until five (5) Business Days after such debriefing is provided. If more than one debriefing is so delayed, the standstill period shall not end earlier than five (5) Business Days after the last debriefing takes place. The Employer shall promptly inform, by the quickest means available, all Bidders of the extended standstill period

48.3 Where a request for debriefing is received by the Employer later than the three (3)-Business Day deadline, the Employer should provide the debriefing as soon as practicable, and

normally no later than fifteen (15) Business Days from the date of publication of Public Notice of Award of contract. Requests for debriefing received outside the three (3)-day deadline shall not lead to extension of the standstill period.

48.4 Debriefings of unsuccessful Bidders may be done in writing or verbally. The Bidder shall bear their own costs of attending such a debriefing meeting.

49. Signing of Contract

49.1 The Employer shall send to the successful Bidder the Letter of Acceptance including the Contract Agreement, and, if s**pecified in the BDS,** a request to submit the Beneficial Ownership Disclosure Form providing additional information on its beneficial ownership. The Beneficial Ownership Disclosure Form, if so requested, shall be submitted within eight (8) Business Days of receiving this request.

49.2 The successful Bidder shall sign, date and return to the Employer, the Contract Agreement within twenty-eight (28) days of its receipt.

50. Performance Security

50.1 Within twenty-eight (28) days of the receipt of the Letter of Acceptance from the Employer, the successful Bidder shall furnish the Performance Security and, if required in the BDS, the Environmental and Social (ES) Performance Security in accordance with the General Conditions of Contract, subject to ITB 41.2 (b), using for that purpose the Performance Security and ES Performance Security Forms included in Section X, Contract Forms, or another form acceptable to the Employer. If the Performance Security furnished by the successful Bidder is in the form of a bond, it shall be issued by a bonding or insurance company that has been determined by the successful Bidder to be acceptable to the Employer. A foreign institution providing a bond shall have a correspondent financial institution located in the Employer's Country, unless the Employer has agreed in writing that a correspondent financial institution is not required.

50.2 Failure of the successful Bidder to submit the above-mentioned Performance Security and, if required in the BDS, the Environmental and Social (ES) Performance Security, or to sign the Contract Agreement shall constitute sufficient grounds for the annulment of the award and forfeiture of the Bid Security. In that event the Employer may award the Contract to the Bidder offering the next Most Advantageous Bid.

51. Adjudicator

51.1 The Employer proposes the person named **in the BDS** to be appointed as Adjudicator under the Contract, at the hourly fee **specified in the BDS**, plus reimbursable expenses. If the Bidder disagrees with this proposal, the Bidder should so state in his Bid. If, in the Letter of Acceptance, the Employer does not agree on the appointment of the Adjudicator, the Employer will request the Appointing Authority designated in the Particular Conditions of Contract (PCC) pursuant to Clause 23.1 of the General Conditions of Contract (GCC), to appoint the Adjudicator.

52. Procurement Related Complaint

52.1 The procedures for making a Procurement-related Complaint are as specified in the BDS.

Section II - Bid Data Sheet (BDS)

The following specific data for the Works to be procured shall complement, supplement, or amend the provisions in the Instructions to Bidders (ITB). Whenever there is a conflict, the provisions herein shall prevail over those in ITB.

A. General	
ITB 1.1	The reference number of the Request for Bids (RFB) is: **MoAL/DoA/WRKS6** The Employer is**: DoA, MoAL** The name of the RFB is: **Construction of SMART Protected Structure for Rapid Multiplication of Potato Tuber Seeds through Root Apical Cutting at Phobjikha, Wangdue Phodrang**
ITB 1.1	The number and identification of lots (contracts) comprising this RFB is: **Construction of SMART Protected Structure for Rapid Multiplication of Potato Tuber Seeds through Root Apical Cutting at Phobjikha, Wangdue Phodrang**
ITB 1.2 (a)	Electronic –Procurement System: **Not Applicable.**
ITB 2.1	The Borrower is: **Royal Government of Bhutan (RGoB) towards the cost of Accelerate Bhutan's Job Transformation through Renewable Natural Resource Value Chains (P506825) to be implemented by DoA, MoAL, as a Special Purpose Vehicle by the Project Implementation Unit.** Loan or Financing Agreement amount applied for: **USD $ 120,000.00** The name of the Project is: **Accelerate Bhutan's Job Transformation through Renewable Natural Resource Value Chains (P506825)**
ITB 4.1	Maximum number of members in the JV shall be: **not be more than 2 (Two) members**
ITB 4.5	A list of debarred firms and individuals is available on the Bank's external website: http://www.worldbank.org/debarr.
B. Contents of Bidding Document	
ITB 7.1	For Clarification of Bid purposes only, the Employer's address is: 1. **Technical Aspects:** Attention: **Mr. Sangay Duba**

	Designation: **Asst Engineer I** Address: **Ministry of Agriculture and Livestock** City: **Thimphu** ZIP Code: **11001** Country: **Bhutan** Electronic mail address: sangayrixin@gmail.com **2. Tendering process:** Attention: **Mr. Sherub Gyeltshen** Designation: **Project Manager, PMU** Address: **RNR Jobs Project Office, MoAL** City: **Thimphu** ZIP Code: **11001** Country: **Bhutan** Electronic mail address: sherubg@moal.gov.bt
ITB 7.1	Requests for clarification should be received by the Employer no later than**: 10 working days upon issuance of the Bid.** The Employer shall publish its responses to the requests for clarification on its Web page: www.moal.gov.bt
ITB 7.4	A Pre-Bid meeting: **Not Applicable** A site visit conducted by the Employer **shall not** be organized.
ITB 7.6	The Employer shall publish Minutes of Pre-Bid Meeting on its Web page: **Not Applicable**
ITB 8.2	Amendments **shall be** published in webpage: www.moal.gov.bt Amendments **shall not** be sent to prospective bidders. It is bidders' responsibility to monitor this website for amendments, if any.
C. Preparation of Bids	
ITB 10.1	The language of the Bid is: **English** **All correspondence exchange shall be in English.** Language for translation of supporting documents and printed literature is **English**.

ITB 11.2 (h)	The Bidder shall submit the following additional documents in its Bid: **a) Code of Conduct for Contractor's Personnel (ES)** The Bidder shall submit its Code of Conduct that will apply to Contractor's Personnel (as defined in Sub- Clause 1 (ii) of the General Conditions of Contract), to ensure compliance with the Contractor's Environmental and Social (ES) obligations under the Contract. The Bidder shall use for this purpose the Code of Conduct form provided in Section IV. No substantial modifications shall be made to this form, except that the Bidder may introduce additional requirements, including as necessary to take into account specific Contract issues/risks. **b) Management Strategies and Implementation Plans (MSIP) to manage the (ES) risks** The Bidder shall submit Management Strategies and Implementation Plans (MSIPs) to manage the following key Environmental and Social (ES) risks: **Refer to Section: 4 (ESMP)** **c) Copy of valid BCTA certificate (W3) contract and Trade License** **d) Copy of valid Tax Clearance Certificate** **e) Sealed and Signed World Bank Anti-Corruption Guidelines without any changes (Refer Annexure -I)**
ITB 11.3 (b)	The following schedules shall be submitted with the Bid: **Construction Schedules for Completion of Works including the Priced Bill of Quantities**
ITB 11.3 (d)	The Bidder shall submit the following additional documents in its Bid: **None**
ITB 13.1	Alternative Bids **shall not** be considered.
ITB 13.2	Alternative times for completion **shall not** be permitted.
ITB 13.4	Alternative technical solutions shall be permitted for the following parts of the Works: **None**
ITB 14.4	Add the following text at the end as a foot note "Letter of Bid Clause (f)" "If a Bidder wishes to offer an unconditional discount for any combination of two (2) or more lots, such Bidder may do so by offering one, and only one, such discount, which shall be expressed as a percentage to be applied to the total value of any combination of lots it has bid for. Pursuant to ITB 35.1 (c), such offered discount will be taken into account for the purpose of determining the lowest evaluated price of the lot (contract) combinations.

	A Bidder may also offer individual unconditional discount(s) to the quoted price(s) for any one or more individual lot(s), in which case the respective discount so offered for each lot shall be considered for the purpose of evaluation. If such bidder also offered a single unconditional discount for a combination of lots as described above, it shall be applied to the net bid price derived after subtracting the value of the offered individual unconditional discounts." **Not Applicable**
ITB 14.5	The prices quoted by the Bidder **shall not** be subject to adjustment during the performance of the Contract.
ITB 15.1	The price shall be quoted by the Bidder in: **Bhutanese Ngultrum (BTN)**
ITB 18.1	The Bid shall be valid until: **at least 90 calendar days.**
ITB 18.3 (a)	The Bid price shall be adjusted by the following factor(s): **Not Applicable**
ITB 19.1	A Bid Securing Declaration **shall be required**.
ITB 19.3 (d)	Other types of acceptable securities: **None**
ITB 19.9	This provision **shall not** be applicable.
ITB 20.3	The written confirmation of authorization to sign on behalf of the Bidder shall consist of: (a) Legally valid Power of Attorney is required to demonstrate the authority of the signatory to sign the Bid; and (b) In the case of Bids submitted by an existing or intended JV, if permitted as per ITB 4.1, the authorization shall be evidenced by a Power of Attorney signed by legally authorized signatories of all the members.
D. Submission of Bids	
ITB 21.2	In addition to the original of the Bid, the number of copies is: **One (1)**
ITB 22.1	For Bid submission purposes only, the Employer's address is: **Project Director** **RNR Jobs, MoAL** **Thimphu Bhutan** Attention: Street Address: **Chhagchhen lam** Floor/ Room number: **PPD office, MoAL** City: **Thimphu** ZIP/Postal Code: **11001** Country: **Bhutan**

	The deadline for Bid is: Date: **November 16, 2026** Time: **13:00Hours** Bidders **shall not** have the option of submitting their Bids electronically.
E. Public Opening of Technical Parts of Bids	
ITB 25.1	The Bid opening shall take place at: **PPD Conference Hall, MoAL** Street Address: **Chhagchhen lam** City: **Thimphu Country: Bhutan** Date: **November 16, 2026** Time: **14:30 Hours**
ITB 25.1	The electronic Bid opening procedures shall be: **Not Applicable**
ITB 25.6	The Letter of Bid – The envelope shall be initialed by 3 (three) representatives of the Employer conducting Bid opening in following submitted bids: 1. Contractor's signed bid form 2. Bills of Quantities (BOQ) 3. Bid Securing Declaration 4. Unconditional discount offer letter (if any) 5. Bid Opening Form
F. Evaluation of Bids – General Provisions	
G. Evaluation of Bids - Technical Parts	
ITB 33.1	At this time the Employer **does not** intend to execute certain specific parts of the Works by subcontractors selected in advance.
ITB 33.2	The parts of the Works for which the Employer permits Bidders to propose Specialized Subcontractors are: **None**
ITB 33.3	Contractor's proposed subcontracting: **Not Applicable**
H. Public Opening of Financial Parts	
ITB 34.2 (c)	The Employer shall provide public opening date and time in the Bid and **the date and time shall be same as on Technical Bid opening**. The financial bid shall be opened together with the Technical Bid.
ITB 34.5	The Letter of Bid – The Financial Part mentioned below shall be initialed by 3 (three) representatives of the Employer conducting Bid opening. 1. Total Bid Price with discount (if any) 2. Presence/absence of bid securing Declaration

I. Evaluation of Bids - Financial Parts	
ITB 37.1	For evaluation and comparison purposes, the currency(ies) of the Bids shall be converted in ___. **Not Applicable.**
ITB 38.1	A margin of domestic preference **shall not** apply.
J. Award of Contract	
ITB 49.1	The successful Bidder shall submit the Beneficial Ownership Disclosure Form providing additional information on its beneficial ownership. **Not Applicable**
ITB 50.1 and 50.2	The successful Bidder **shall not** be required to submit an Environmental and Social (ES) Performance Security.
ITB 51 Adjudicator	The Adjudicator proposed by the Employer is: **All disputes or differences arising in connection with the present Contract shall be finally resolved by arbitration in accordance with Alternative Dispute Resolution Act of Bhutan 2013 and its Rules and Regulations 2019.**
ITB 52.1	The procedures for making a Procurement-related Complaint are detailed in the "Procurement Regulations for IPF Borrowers (Annex III)." If a Bidder wishes to make a Procurement-related Complaint, the Bidder shall submit its complaint following these procedures, In Writing (by the quickest means available, such as by email or fax), to: **For the attention**: Sherub Gyeltshen **Title/position**: Project Manager **Employer**: PMU, MoAL **Email address**: sherubg@moal.gov.bt In summary, a Procurement-related Complaint may challenge any of the following: **1.** the terms of the Bidding Documents; **2.** the Employer's decision to exclude a Bidder from the procurement process prior to the award of contract; and **3.** the Employer's decision to award the contract.

Section III - Evaluation and Qualification Criteria

This section contains all the criteria that the Employer shall use to evaluate Bids and qualify Bidders when qualification in the evaluation of the Technical Part is applied. No other factors, methods or criteria shall be used other than those specified in this bidding document. The Bidder shall provide all the information requested in the forms included in Section IV, Bidding Forms.

Wherever a Bidder is required to state a monetary amount, Bidders should indicate in BTN:

- For construction turnover or financial data required for each year

Table of Criteria

1. ..... Technical Part 42
2. ..... Financial Part 50

1. Technical Part

1.1. Adequacy of Technical Proposal

Evaluation of the Bidder's Technical Proposal will include an assessment of the Bidder's technical capacity to mobilize key equipment and personnel for the contract consistent with its proposal regarding work methods, scheduling, and material sourcing in sufficient detail and fully in accordance with the requirements stipulated in Section VII, Works' Requirements.

For this purpose, the Bidder should also submit:

i. A detailed note outlining its proposed methodology and program of construction including implementation of the Environmental and Social Management Plan, and safety Assurance under the contract backed with equipment planning and deployment, materials and manpower planning and deployment ***(including women and youth)***, duly supported with broad calculations and quality control system/assurance procedures proposed to be adopted, justifying their capability of execution and completion of the work as per technical specifications within the stipulated period of completion as per milestones.

ii. Subcontracting is not allowed.

1.2. Alternative Technical Solutions for specified parts of Works

The acceptability of technical alternatives for parts of the Works, if permitted under ITB 13.4, will be determined as follows: **Not Applicable**

1.3. Specialized Subcontractors

If permitted under ITB 33, only the specific experience of Subcontractors for specialized works permitted by the Employer will be considered. The general experience and financial resources of the Specialized Subcontractors shall not be added to those of the Bidder for purposes of qualification of the Bidder. **Not Applicable**

1.4. Qualification Criteria

Pursuant to ITB 32.1, the Employer shall assess each Bid against the following Qualification Criteria. Requirements not included in the text below shall not be used in the evaluation of the Bidder's qualifications.

Eligibility and Qualification Criteria			Compliance Requirements				Documentation
No.	Subject	Requirement	Single Entity	Joint Venture (existing or intended)			Submission Requirements
				All members Combined	Each member	At least one member	
1. Eligibility							
1.1	Nationality	Nationality in accordance with ITB 4.4	Must meet requirement	Must meet requirement	Must meet requirement	N/A	Forms ELI – 1.1 and 1.2, with attachments
1.2	Conflict of Interest	No conflicts of interest in accordance with ITB 4.2	Must meet requirement	Must meet requirement	Must meet requirement	N/A	Letter of Bid
1.3	Bank Eligibility	Not having been declared ineligible by the Bank, as described in ITB 4.5.	Must meet requirement	Must meet requirement	Must meet requirement	N/A	Letter of Bid
1.4	State-owned enterprise or institution of the Borrower country	Meets conditions of ITB 4.6	Must meet requirement	Must meet requirement	Must meet requirement	N/A	Forms ELI – 1.1 and 1.2, with attachments

Eligibility and Qualification Criteria			Compliance Requirements				Documentation
No.	Subject	Requirement	Single Entity	Joint Venture (existing or intended)			Submission Requirements
				All members Combined	Each member	At least one member	
2. Historical Contract Non-Performance							
2.1	History of Non-Performing Contracts	Non-performance of a contract[1] did not occur as a result of contractor default since 1st January 2022	Must meet requirement [1 and 2]	Must meet requirements	Must meet requirement[2]	N/A	Form CON-2
2.2	Suspension Based on Execution of Bid/Proposal Securing Declaration by the Employer	Not under suspension based on execution of a Bid/Proposal Securing Declaration pursuant to ITB 4.7 and ITB 19.9.	Must meet requirement	Must meet requirement	Must meet requirement	N/A	Letter of Bid
2.3	Pending Litigation	Bidder's financial position and prospective long term profitability sound according to criteria established in 3.1 below and assuming that all pending litigation will be resolved against the Bidder	Must meet requirement	N/A	Must meet requirement	N/A	Form CON – 2
2.4	Litigation History	No consistent history of court/arbitral award decisions against the Bidder[3] since 1st January 2022	Must meet requirement	Must meet requirement	Must meet requirement	N/A	Form CON – 2

[1] Nonperformance, as decided by the Employer, shall include all contracts where (a) non performance was not challenged by the contractor, including through referral to the dispute resolution mechanism under the respective contract, and (b) contracts that were so challenged but fully settled against the contractor. Non performance shall not include contracts where Employers decision was overruled by the dispute resolution mechanism. Non performance must be based on all information on fully settled disputes or litigation, i.e. dispute or litigation that has been resolved in accordance with the dispute resolution mechanism under the respective contract and where all appeal instances available to the Bidder have been exhausted.

[2] This requirement also applies to contracts executed by the Bidder as JV member.

[3] The Bidder shall provide accurate information on the letter of Bid about any litigation or arbitration resulting from contracts completed or ongoing under its execution over the last five years. A consistent history of court/arbitral awards against the Bidder or any member of a joint venture may result in disqualifying the Bidder.

Eligibility and Qualification Criteria			Compliance Requirements				Documentation
No.	Subject	Requirement	Single Entity	Joint Venture (existing or intended)			Submission Requirements
				All members Combined	Each member	At least one member	
2.5	Declaration: Environmental and Social (ES) past performance	Declare any civil work contracts that have been suspended or terminated and/or performance security called by an employer for reasons of breach of environmental or social (including Sexual Exploitation and Abuse)) contractual obligations in the past three years.[4]	Must make the declaration. Where there are Specialized Sub-contractor/s, the Specialized Sub-contractor/s must also make the declaration.	N/A	Each must make the declaration. Where there are Specialized Sub-contractor/s, the Specialized Sub-contractor/s must also make the declaration.	N/A	Form CON-3 ES Performance Declaration
3. Financial Situation and Performance							
3.1	Financial Capabilities	To demonstrate financial capabilities, the bidder must submit Letter of Credit from the financial institution amounted to **BTN 3.9 million.** The Bidders shall also demonstrate, to the satisfaction of the Employer, that it has adequate sources of finance to meet the cash flow requirements on works currently in progress and for future contract commitments.	Must meet requirement	Must meet Requirement	N/A	N/A	Letter of Credit /Bank certificate (SBD)

[4] The Employer may use this information to seek further information or clarifications in carrying out its due diligence.

Eligibility and Qualification Criteria			Compliance Requirements				Documentation
No.	Subject	Requirement	Single Entity	Joint Venture (existing or intended)			Submission Requirements
				All members Combined	Each member	At least one member	
3.2	Average Annual Construction Turnover	Annual construction turnover for calculated as total certified payments received for contracts for a year is **BTN 5 (Five) Million** in progress and/or completed within the last **Five (5)** financial years	Must meet requirement	Must meet requirement	Must meet **25**%, of the requirement	Must meet **40** %, of the requirement	Form FIN – 3.2
3.3	Current contract commitments/ Work in progress	Declare all work in hand and shouldn't not exceed by the maximum numbers of work in hand prescribed by the BCTA for Medium category	Must meet requirement	Must meet requirement	Must meet requirement	Must meet requirement	Form FIN 3.4
4. Experience							
4.1 (a)	General Construction Experience	Experience under construction contracts in the role of prime contractor, JV member, sub-contractor, or management contractor for at least the last **3 (Three)** years, starting **1st January 2021**	Must meet requirement	N/A	Must meet requirement	N/A	Form EXP – 4.1
4.2 (a)	Specific Construction & Contract Management Experience	(i) A minimum number of **1 (one)** similar contract specified below that have been satisfactorily and substantially[5] completed as a prime contractor, joint venture	Must meet requirements	Must meet requirement[7]	N/A	**NA**	Form EXP 4.2(a)

[5] Substantial completion shall be based on 80% or more works completed under the contract.

[7] In the case of JV, the value of contracts completed by its members shall not be aggregated to determine whether the requirement of the minimum value of a single contract has been met. Instead, each contract performed by each member shall satisfy the minimum value of a single contract as required for single entity. In determining whether the JV meets the requirement of total number of contracts, only the number of contracts completed by all members each of value equal or more than the minimum value required shall be aggregated.

Eligibility and Qualification Criteria			Compliance Requirements				Documentation
No.	Subject	Requirement	Single Entity	Joint Venture (existing or intended)			Submission Requirements
				All members Combined	Each member	At least one member	
		member[6], management contractor or sub-contractor[6] between **1st January 2021** and bid submission deadline:					
4.2 (b)		For the above and any other contracts [substantially completed and under implementation] as prime contractor, joint venture member, or sub-contractor between **1st January 2021** and Application submission deadline, a minimum construction experience in the following key activities successfully completed in any one year [8]	Must meet requirements	Must meet requirements	N/A	NA	Form EXP – 4.2 (b)
4.2 ©		For contracts [substantially completed and under implementation] as prime contractor, joint venture member, or Subcontractor between **1st January 2021** and Application submission deadline, experience in managing ES risks and impacts.	Must meet requirements	Must meet requirements	NA	NA	Form EXP – 4.2 ©

[6] For contracts under which the Bidder participated as a joint venture member or sub-contractor, only the Bidder's share, by value, shall be considered to meet this requirement.

[8] Volume, number or rate of production of any key activity can be demonstrated in one or more contracts combined if executed during same time period.

5. Key Personnel

The Bidder must demonstrate that it will have suitably qualified (and in adequate numbers) Key Personnel, as described below:

SN	Personnel	No	Qualification and Experience
1	Project Engineer	1	B.Tech./B.E. (Civil) > 5 years experiences / Diploma (Civil) >7 years experiences
2	Site Supervisor	1	VTI in Civil with >5 years experiences
3	E&S Safety Engineer	1	Fresh Graduate/Diploma Engineer with Certified for Employability Skills for Construction Engineers' in CMS, OHS, e-GP & CDB/BCTA refresher courses

The Bidder shall submit the CV along with the proof of qualification to authenticate the experience and qualification for the manpower listed above.

The Bidder shall provide details of the Key Personnel and such other Key Personnel that the Bidder considers appropriate to perform the Contract, together with their academic qualifications and work experience. The Bidder shall complete the relevant Forms in Section IV, Bidding Forms.

6. Equipment

The Bidder must demonstrate that it has access to the key equipment listed hereafter:

No.	Equipment Type and Characteristics	Minimum Number required
1	Backhoe Loader	1
2	Tripper Truck	1
3	Concrete Mixer Machine	1
4	Welding Machine Set	1
5	Rod Cutter	1

The Bidder shall provide further details of proposed items of equipment using Form EQU in Section IV, Bidding Forms.

The Bidder shall submit the documents to prove the ownership of the equipment. For hiring of equipment, the consent letter along with the proof of ownership with the issuer shall be submitted along with the bid.

7. Multiple Contracts

This section describes criteria for qualification for each lot (contract) for multiple lots (contracts). The criteria for qualification is aggregate minimum requirement for respective lots as specified under items 3.1, 3.2, 4.2(a) and 4.2(b). However, with respect to the specific experience under item 4.2 (a) of Section III, the Employer will select any one or more of the options as identified below:

N is the minimum number of contracts

V is the minimum value of a single contract

(a) For one Contract:

N contracts, each of minimum value V;

For awarding contracts more than one Lot, the Bidder should propose distinct and separate key staff and equipment.

2. Financial Part

2.1 Margin of Preference (Not Applicable)

2.2 Multiple Contracts

Pursuant to ITB 35.3, if Works are grouped in multiple contracts, evaluation will be as follows:

Award Criteria for Multiple Contracts: Lots

Bidders have the option to Bid for any one or more lots. Bids will be evaluated lot-wise, taking into account discounts offered, if any, after considering all possible combination of lots. The contract(s) will be awarded to the Bidder or Bidders offering the lowest evaluated cost to the Employer for combined lots, subject to the selected Bidder(s) meeting the required qualification criteria for lot or combination of lots as the case may be.

2.3 Sustainable Procurement (Not Applicable)

2.4 Alternative Completion Time (Not Applicable)

2.5 Alternative Technical Solutions for specified parts of the Works (Not Applicable)

2.6 Other criteria

If permitted under ITB 35.1(f): **None**

Section IV - Bidding Forms

Table of Forms

Letter of Bid - Technical Part 52

Appendix A to Technical Part: Technical Proposal 55
- Site Organization 56
- Method Statement 57
- Mobilization Schedule 58
- Construction Schedule 59
- Environmental and Social, Health Management Strategies and Implementation Plans (ES-MSIP) 60
- Code of Conduct for Contractor's Personnel (ES) Form 61

Appendix B to Technical Part: Equipment 65

Appendix C to Technical Part: Key Personnel 66
- Form PER -1: Key Personnel 67
- Form PER-2: Resume and Declaration 69

Appendix D to Technical Part: Bidder's Qualification 71
- Form ELI -1.1 Bidder Information Form 72
- Form ELI -1.2 Bidder's JV Information Form 73
- Form CON – 2 Historical Contract Non-Performance, Pending Litigation and Litigation History 74
- Form CON – 3: Environmental and Social (ES) Performance Declaration 76
- Form FIN – 3.1 Financial Situation and Performance 78
- Form FIN – 3.2 Average Annual Construction Turnover 80
- Form FIN – 3.3 Financial Resources 81
- Form FIN – 3.4 Current Contract Commitments / Works in Progress 82
- Form EXP - 4.1 General Construction Experience 83
- Form EXP - 4.2(a) Specific Construction and Contract Management Experience 84
- Form EXP - 4.2(a) (cont.) Specific Construction and Contract Management Experience (cont.) 85
- Form EXP - 4.2(b) Construction Experience in Key Activities 86
- Form EXP - 4.2(c) Specific Experience in Managing ES aspects 88

Appendix E to Technical Part: Bid Security 89
- Form of Demand Guarantee 89
- Form of Bid-Securing Declaration 91
- Letter of Bid - Financial Part 92

Appendix A to Financial Part: Schedules 94

Letter of Bid - Technical Part

INSTRUCTIONS TO BIDDERS: DELETE THIS BOX ONCE YOU HAVE COMPLETED THE DOCUMENT

The Bidder must prepare this Letter of Bid on stationery with its letterhead clearly showing the Bidder's complete name and business address.

Note: All italicized text is to help Bidders in preparing this form.

Date of this Bid submission: [*insert date (as day, month and year) of Bid submission*]
Request for Bid No.: [*insert identification*]
Alternative No.: [*insert identification No if this is a Bid for an alternative*]

To: **[*insert complete name of Employer*]**

We, the undersigned, hereby submit our Bid, in two parts, namely:

(d) the Technical Part, and

(e) the Financial Part

In submitting our Bid, we make the following declarations:

(a) **No reservations:** We have examined and have no reservations to the bidding document, including Addenda issued in accordance with Instructions to Bidders (ITB 8);

(b) **Eligibility**: We meet the eligibility requirements and have no conflict of interest in accordance with ITB 4;

(c) **Bid-Securing Declaration:** We have not been suspended nor declared ineligible by the Employer based on execution of a Bid-Securing Declaration or Proposal-Securing Declaration in the Employer's country in accordance with ITB 4.7;

(d) **Conformity**: We offer to execute in conformity with the bidding document the following Works: [*insert a brief description of the Works*]_____

_____;

(e) **Bid Validity**: Our Bid shall be valid until the date specified in the ITB 18.1, and it shall remain binding upon us and may be accepted at any time on or before this date;

(f) **Performance Security:** If our Bid is accepted, we commit to obtain a Performance Security [*and an Environmental and Social (ES) Performance Security,* ***Delete if not applicable***] in accordance with the bidding document;

(g) **One Bid Per Bidder:** We are not submitting any other Bid(s) as an individual Bidder or as a subcontractor, and we are not participating in any other Bid(s) as a Joint Venture member, and meet the requirements of ITB 4.3, other than alternative Bids submitted in accordance with ITB 13;

(h) **Suspension and Debarment**: We, along with any of our subcontractors, suppliers, consultants, manufacturers, or service providers for any part of the contract, are not subject to, and not controlled by any entity or individual that is subject to, a temporary suspension or a debarment imposed by the World Bank Group or a debarment imposed by the World Bank Group in accordance with the Agreement for Mutual Enforcement of Debarment Decisions between the World Bank and other development banks. Further, we are not ineligible under the Employer's country laws or official regulations or pursuant to a decision of the United Nations Security Council;

(i) **State-owned enterprise or institution:** [*select the appropriate option and delete the other*] [*We are not a state-owned enterprise or institution*] / [*We are a state-owned enterprise or institution but meet the requirements of ITB 4.6*];

(j) **Binding Contract**: We understand that this Bid, together with your written acceptance thereof included in your Letter of Acceptance, shall constitute a binding contract between us, until a formal contract is prepared and executed;

(k) **Not Bound to Accept:** We understand that you are not bound to accept the lowest evaluated cost Bid, the Most Advantageous Bid or any other Bid that you may receive; and

(l) **Fraud and Corruption:** We hereby certify that we have taken steps to ensure that no person acting for us or on our behalf engages in any type of Fraud and Corruption;

(m) **Adjudicator:** We accept the appointment of *[insert name proposed in Bid Data Sheet]* as the Adjudicator.

[or]

We do not accept the appointment of *[insert name proposed in Bid Data Sheet]* as the Adjudicator and propose instead that *[insert name]* be appointed as Adjudicator, whose daily fees and biographical data are attached.

Name of the Bidder: *[*insert complete name of the Bidder*]

Name of the person duly authorized to sign the Bid on behalf of the Bidder: ** [*insert complete name of person duly authorized to sign the Bid*]

Title of the person signing the Bid: [*insert complete title of the person signing the Bid*]

Signature of the person named above: [*insert signature of person whose name and capacity are shown above*]

Date signed [*insert date of signing*] **day of** [*insert month*], [*insert year*]

Date signed _____ day of _____, _____

*: In the case of the Bid submitted by joint venture specify the name of the Joint Venture as Bidder
**: Person signing the Bid shall have the power of attorney given by the Bidder to be attached with the Bid

Appendix A to Technical Part: Technical Proposal

Site Organization

[insert Site Organization information]

Method Statement

[insert Method Statement]

Mobilization Schedule

[insert Mobilization Schedule]

Construction Schedule

[insert Construction Schedule]

Environmental and Social, Health Management Strategies and Implementation Plans (ES-MSIP)

The Bidder shall submit comprehensive and concise Environmental and Social Management Strategies and Implementation Plans (ES-MSIP) as required by ITB 11.2 (h) of the Bid Data Sheet. These strategies and plans shall describe in detail the actions, materials, equipment, management processes etc. that will be implemented by the Contractor, and its subcontractors.

In developing these strategies and plans, the Bidder shall have regard to the ES provisions of the contract including those as may be more fully described in the Works Requirements in Section VII

Code of Conduct for Contractor's Personnel (ES) Form

Note to the Bidder:

The minimum content of the Code of Conduct form as set out by the Employer shall not be substantially modified. However, the Bidder may add requirements as appropriate, including to take into account Contract-specific issues/risks.

The Bidder shall initial and submit the Code of Conduct form as part of its bid.

CODE OF CONDUCT FOR CONTRACTOR'S PERSONNEL

We are the Contractor, [*enter name of Contractor*]. We have signed a contract with [*enter name of Employer*] for [*enter description of the Works*]. These Works will be carried out at [*enter the Site and other locations where the Works will be carried out*]. Our contract requires us to implement measures to address environmental and social risks related to the Works, including the risks of sexual exploitation, sexual abuse and sexual harassment.

This Code of Conduct is part of our measures to deal with environmental and social risks related to the Works. It applies to all our staff, laborers and other employees at the Works Site or other places where the Works are being carried out. It also applies to the personnel of each subcontractor and any other personnel assisting us in the execution of the Works. All such persons are referred to as "**Contractor's Personnel"** and are subject to this Code of Conduct.

This Code of Conduct identifies the behavior that we require from all Contractor's Personnel.

Our workplace is an environment where unsafe, offensive, abusive or violent behavior will not be tolerated and where all persons should feel comfortable raising issues or concerns without fear of retaliation.

REQUIRED CONDUCT

Contractor's Personnel shall:

1. carry out his/her duties competently and diligently;
2. comply with this Code of Conduct and all applicable laws, regulations and other requirements, including requirements to protect the health, safety and well-being of other Contractor's Personnel and any other person;
3. maintain a safe working environment including by:
    a. ensuring that workplaces, machinery, equipment and processes under each person's control are safe and without risk to health;
    b. wearing required personal protective equipment;
    c. using appropriate measures relating to chemical, physical and biological substances and agents; and

   d. following applicable emergency operating procedures.

4. report work situations that he/she believes are not safe or healthy and remove himself/herself from a work situation which he/she reasonably believes presents an imminent and serious danger to his/her life or health;
5. treat other people with respect, and not discriminate against specific groups such as women, people with disabilities, migrant workers or children;
6. not engage in Sexual Harassment, which means unwelcome sexual advances, requests for sexual favors, and other verbal or physical conduct of a sexual nature with other Contractor's or Employer's Personnel;
7. not engage in Sexual Exploitation, which means any actual or attempted abuse of position of vulnerability, differential power or trust, for sexual purposes, including, but not limited to, profiting monetarily, socially or politically from the sexual exploitation of another;
8. not engage in Sexual Abuse, which means the actual or threatened physical intrusion of a sexual nature, whether by force or under unequal or coercive conditions;
9. not engage in any form of sexual activity with individuals under the age of 18, except in case of pre-existing marriage;
10. complete relevant training courses that will be provided related to the environmental and social aspects of the Contract, including on health and safety matters, and Sexual Exploitation, and Abuse (SEA) and Sexual Harassment (SH);
11. report violations of this Code of Conduct; and
12. not retaliate against any person who reports violations of this Code of Conduct, whether to us or the Employer, or who makes use of the grievance mechanism for Contractor's Personnel or the project's Grievance Redress Mechanism.

RAISING CONCERNS

If any person observes behavior that he/she believes may represent a violation of this Code of Conduct, or that otherwise concerns him/her, he/she should raise the issue promptly. This can be done in either of the following ways:

1. Contact [*enter name of the Contractor's Social Expert with relevant experience in handling gender-based violence, or if such person is not required under the Contract, another individual designated by the Contractor to handle these matters*] in writing at this address [ ] or by telephone at [ ] or in person at [ ]; or
2. Call [ ] to reach the Contractor's hotline *(if any)* and leave a message.

The person's identity will be kept confidential, unless reporting of allegations is mandated by the country law. Anonymous complaints or allegations may also be submitted and will be given all due and appropriate consideration. We take seriously all reports of possible misconduct and will investigate and take appropriate action. We will provide warm referrals to service providers that may help support the person who experienced the alleged incident, as appropriate.

There will be no retaliation against any person who raises a concern in good faith about any behavior prohibited by this Code of Conduct. Such retaliation would be a violation of this Code of Conduct.

CONSEQUENCES OF VIOLATING THE CODE OF CONDUCT

Any violation of this Code of Conduct by Contractor's Personnel may result in serious consequences, up to and including termination and possible referral to legal authorities.

FOR CONTRACTOR'S PERSONNEL:

I have received a copy of this Code of Conduct written in a language that I comprehend. I understand that if I have any questions about this Code of Conduct, I can contact [*enter name of Contractor's contact person with relevant experience*] requesting an explanation.

Name of Contractor's Personnel: [insert name]

Signature: _____

Date: (day month year): _____

Countersignature of authorized representative of the Contractor:

Signature: _____

Date: (day month year): _____

ATTACHMENT 1 TO THE CODE OF CONDUCT FORM

BEHAVIORS CONSTITUTING SEXUAL EXPLOITATION AND ABUSE (SEA) AND BEHAVIORS CONSTITUTING SEXUAL HARASSMENT (SH)

The following non-exhaustive list is intended to illustrate types of prohibited behaviors:

(1) **Examples of sexual exploitation and abuse** include, but are not limited to:

- A Contractor's Personnel tells a member of the community that he/she can get them jobs related to the work site (e.g. cooking and cleaning) in exchange for sex.
- A Contractor's Personnel that is connecting electricity input to households says that he can connect women headed households to the grid in exchange for sex.
- A Contractor's Personnel rapes, or otherwise sexually assaults a member of the community.
- A Contractor's Personnel denies a person access to the Site unless he/she performs a sexual favor.
- A Contractor's Personnel tells a person applying for employment under the Contract that he/she will only hire him/her if he/she has sex with him/her.

(2) **Examples of sexual harassment in a work context**

- Contractor's Personnel comment on the appearance of another Contractor's Personnel (either positive or negative) and sexual desirability.
- When a Contractor's Personnel complains about comments made by another Contractor's Personnel on his/her appearance, the other Contractor's Personnel comment that he/she is "asking for it" because of how he/she dresses.
- Unwelcome touching of a Contractor's or Employer's Personnel by another Contractor's Personnel.
- A Contractor's Personnel tells another Contractor's Personnel that he/she will get him/her a salary raise, or promotion if he/she sends him/her naked photographs of himself/herself.
- Others

Appendix B to Technical Part: Equipment

The Bidder shall provide adequate information to demonstrate clearly that it has the capability to meet the requirements for the key equipment listed in Section III, Evaluation and Qualification Criteria. A separate Form shall be prepared for each item of equipment listed, or for alternative equipment proposed by the Bidder.

Item of equipment		
Equipment information	Name of manufacturer	Model and power rating
	Capacity	Year of manufacture
Current status	Current location	
	Details of current commitments	
Source	Indicate source of the equipment o Owned o Rented o Leased o Specially manufactured	

Omit the following information for equipment owned by the Bidder.

Owner	Name of owner	
	Address of owner	
	Telephone	Contact name and title
	Fax	Telex
Agreements	Details of rental / lease / manufacture agreements specific to the project	

Appendix C to Technical Part: Key Personnel

Form PER -1: Key Personnel Schedule

Bidders should provide the names and details of the suitably qualified Key Personnel to perform the Contract. The data on their experience should be supplied using the Form PER-2 below for each candidate.

Key Personnel

1.	**Title of position:**	
	Name of candidate:	
	Duration of appointment:	[*insert the whole period (start and end dates) for which this position will be engaged*]
	Time commitment: for this position:	[*insert the number of days/week/months/ that has been scheduled for this position*]
	Expected time schedule for this position:	[*insert the expected time schedule for this position (e.g. attach high level Gantt chart*]
2.	**Title of position:** *[Environmental Specialist]*	
	Name of candidate:	
	Duration of appointment:	[*insert the whole period (start and end dates) for which this position will be engaged*]
	Time commitment: for this position:	[*insert the number of days/week/months/ that has been scheduled for this position*]
	Expected time schedule for this position:	[*insert the expected time schedule for this position (e.g. attach high level Gantt chart*]
3.	**Title of position:** *[Health and Safety Specialist]*	
	Name of candidate:	
	Duration of appointment:	[*insert the whole period (start and end dates) for which this position will be engaged*]
	Time commitment: for this position:	[*insert the number of days/week/months/ that has been scheduled for this position*]
	Expected time schedule for this position:	[*insert the expected time schedule for this position (e.g. attach high level Gantt chart*]

4.	**Title of position:** *[Social Specialist]*	
	Name of candidate:	
	Duration of appointment:	[*insert the whole period (start and end dates) for which this position will be engaged*]
	Time commitment: for this position:	[*insert the number of days/week/months/ that has been scheduled for this position*]
	Expected time schedule for this position:	[*insert the expected time schedule for this position (e.g. attach high level Gantt chart*]
5.	**Title of position: Sexual Exploitation, Abuse and Harassment Expert** *[Where a Project SEA risks are assessed to be substantial or high, Key Personnel shall include an expert with relevant experience in addressing sexual exploitation, sexual abuse and sexual harassment cases]*	
	Name of candidate	
	Duration of appointment:	[*insert the whole period (start and end dates) for which this position will be engaged*]
	Time commitment: for this position:	[*insert the number of days/week/months/ that has been scheduled for this position*]
	Expected time schedule for this position:	[*insert the expected time schedule for this position (e.g. attach high level Gantt chart*]
6.	**Title of position:** ***[insert title]***	
	Name of candidate	
	Duration of appointment:	[*insert the whole period (start and end dates) for which this position will be engaged*]
	Time commitment: for this position:	[*insert the number of days/week/months/ that has been scheduled for this position*]
	Expected time schedule for this position:	[*insert the expected time schedule for this position (e.g. attach high level Gantt chart*]

Form PER-2: Resume and Declaration
Key Personnel

Name of Bidder

Position [#*1*]: [*title of position from Form PER-1*]		
Personnel information	**Name:**	**Date of birth:**
	Address:	**E-mail:**
	Professional qualifications:	
	Academic qualifications:	
	Language proficiency:*[language and levels of speaking, reading and writing skills]*	
details		
	Address of employer:	
	Telephone:	**Contact (manager / personnel officer):**
	Fax:	
	Job title:	**Years with present employer:**

Summarize professional experience in reverse chronological order. Indicate particular technical and managerial experience relevant to the project.

Project	**Role**	**Duration of involvement**	**Relevant experience**
[main project details]	*[role and responsibilities on the project]*	*[time in role]*	*[describe the experience relevant to this position]*

Declaration

I, the undersigned Key Personnel, certify that to the best of my knowledge and belief, the information contained in this Form PER-2 correctly describes myself, my qualifications and my experience.

I confirm that I am available as certified in the following table and throughout the expected time schedule for this position as provided in the Bid:

Commitment	**Details**
Commitment to duration of contract:	*[insert period (start and end dates) for which this Key Personnel is available to work on this contract]*
Time commitment:	*[insert the number of days/week/months/ that this Key Personnel will be engaged]*

I understand that any misrepresentation or omission in this Form may:

(a) be taken into consideration during Bid evaluation;

(b) my disqualification from participating in the Bid;

(c) my dismissal from the contract.

Name of Key Personnel: [*insert name*]

Signature: _____

Date: (day month year): _____

Countersignature of authorized representative of the Bidder:

Signature: _____

Date: (day month year): _____

Appendix D to Technical Part: Bidder's Qualification

To establish its qualifications to perform the contract in accordance with Section III (Evaluation and Qualification Criteria) the Bidder shall provide the information requested in the corresponding Information Sheets included hereunder.

Form ELI -1.1 Bidder Information Form Date: _____ RFB No. and title: _____ Page _____of _____pages Bidder's name
In case of Joint Venture (JV), name of each member:
Bidder's actual or intended country of registration: *[indicate country of Constitution]*
Bidder's actual or intended year of incorporation:
Bidder's legal address [in country of registration]:
Bidder's authorized representative information Name: _____ Address: _____ Telephone/Fax numbers: _____ E-mail address: _____
1. Attached are copies of original documents of ☐ Articles of Incorporation (or equivalent documents of constitution or association), and/or documents of registration of the legal entity named above, in accordance with ITB 4.4. ☐ In case of JV, letter of intent to form JV or JV agreement, in accordance with ITB 4.1. ☐ In case of state-owned enterprise or institution, in accordance with ITB 4.6 documents establishing: ● Legal and financial autonomy ● Operation under commercial law ● Establishing that the Bidder is not under the supervision of the Employer 2. Included are the organizational chart, a list of Board of Directors, and the beneficial ownership. *[If required under BDS ITB 49.1, the successful Bidder shall provide additional information on beneficial ownership, using the Beneficial Ownership Disclosure Form.]*

Form ELI -1.2 Bidder's JV Information Form
(to be completed for each member of Bidder's JV)

Date: _____
RFB No. and title: _____
Page _____ of _____ pages

Bidder's JV name:
JV member's name:
JV member's country of registration:
JV member's year of constitution:
JV member's legal address in country of constitution:
JV member's authorized representative information Name: _____ Address: _____ Telephone/Fax numbers: _____ E-mail address: _____
1. Attached are copies of original documents of ☐ Articles of Incorporation (or equivalent documents of constitution or association), and/or registration documents of the legal entity named above, in accordance with ITB 4.4. ☐ In case of a state-owned enterprise or institution, documents establishing legal and financial autonomy, operation in accordance with commercial law, and that they are not under the supervision of the Employer, in accordance with ITB 4.6. 2. Included are the organizational chart, a list of Board of Directors, and the beneficial ownership. *[If required under BDS ITB 49.1, the successful Bidder shall provide additional information on beneficial ownership for each JV member using the Beneficial Ownership Disclosure Form.]*

Form CON – 2 Historical Contract Non-Performance, Pending Litigation and Litigation History

Bidder's Name: _____
Date: _____
JV Member's Name_____
RFB No. and title: _____
Page _____of _____pages

Non-Performed Contracts in accordance with Section III, Evaluation and Qualification Criteria			
☐ Contract non-performance did not occur since 1st January *[insert year]* specified in Section III, Evaluation and Qualification Criteria, Sub-Factor 2.1. ☐ Contract(s) not performed since 1st January *[insert year]* specified in Section III, Evaluation and Qualification Criteria, requirement 2.1			
Year	**Non-performed portion of contract**	**Contract Identification**	**Total Contract Amount (In Bhutanese Currency (BTN)**
[insert year]	*[insert amount and percentage]*	Contract Identification: *[indicate complete contract name/ number, and any other identification]* Name of Employer: *[insert full name]* Address of Employer: *[insert street/city/country]* Reason(s) for nonperformance: *[indicate main reason(s)]*	*[insert amount]*
Pending Litigation, in accordance with Section III, Evaluation and Qualification Criteria			
☐ No pending litigation in accordance with Section III, Evaluation and Qualification Criteria, Sub-Factor 2.3. ☐ Pending litigation in accordance with Section III, Evaluation and Qualification Criteria, Sub-Factor 2.3 as indicated below.			

Year of dispute	Amount in dispute (currency)	Contract Identification	Total Contract Amount (in Bhutanese Currency (BTN)
		Contract Identification: _____ Name of Employer: _____ Address of Employer: _____ Matter in dispute: _____ Party who initiated the dispute: ____ Status of dispute: _____	
		Contract Identification: Name of Employer: Address of Employer: Matter in dispute: Party who initiated the dispute: Status of dispute:	

Litigation History in accordance with Section III, Evaluation and Qualification Criteria

☐ No Litigation History in accordance with Section III, Evaluation and Qualification Criteria, Sub-Factor 2.4.

☐ Litigation History in accordance with Section III, Evaluation and Qualification Criteria, Sub-Factor 2.4 as indicated below.

Year of award	Outcome as percentage of Net Worth	Contract Identification	Total Contract Amount (in Bhutanese currency (BTN)
[insert year]	*[insert percentage]*	Contract Identification: [indicate complete contract name, number, and any other identification] Name of Employer: *[insert full name]* Address of Employer: *[insert street/city/country]* Matter in dispute: *[indicate main issues in dispute]* Party who initiated the dispute: *[indicate "Employer" or "Contractor"]* Reason(s) for Litigation and award decision *[indicate main reason(s)]*	*[insert amount]*

Form CON – 3: Environmental and Social (ES) Performance Declaration

[The following table shall be filled in for the Bidder, each member of a Joint Venture and each Specialized Subcontractor]

Bidder's Name: *[insert full name]*
Date: *[insert day, month, year]*
Joint Venture Member's or Specialized Subcontractor's Name: *[insert full name]*
RFB No. and title: *[insert RFB number and title]*
Page *[insert page number]* of *[insert total number]* pages

Environmental and Social, Performance Declaration in accordance with Section III, Qualification Criteria, and Requirements			
☐ **No suspension or termination of contract**: An employer has not suspended or terminated a contract and/or called the performance security for a contract for reasons related to Environmental, or Social (ES) performance since the date specified in Section III, Qualification Criteria, and Requirements, Sub-Factor 2.5. ☐ **Declaration of suspension or termination of contract**: The following contract(s) has/have been suspended or terminated and/or Performance Security called by an employer(s) for reasons related to Environmental or Social (ES) performance since the date specified in Section III, Qualification Criteria, and Requirements, Sub-Factor 2.5. Details are described below:			
Year	**Suspended or terminated portion of contract**	**Contract Identification**	**Total Contract Amount (in Bhutanese Currency (BTN)**
[insert year]	*[insert amount and percentage]*	Contract Identification: *[indicate complete contract name/ number, and any other identification]* Name of Employer: *[insert full name]* Address of Employer: *[insert street/city/country]* Reason(s) for suspension or termination: *[indicate main reason(s) e.g. for gender-based violence; sexual exploitation or sexual abuse breaches]*	*[insert amount]*
[insert year]	*[insert amount and percentage]*	Contract Identification: *[indicate complete contract name/ number, and any other identification]* Name of Employer: *[insert full name]* Address of Employer: *[insert street/city/country]*	*[insert amount]*

		Reason(s) for suspension or termination: *[indicate main reason(s)]*	
...	...	*[list all applicable contracts]*	...
Performance Security called by an employer(s) for reasons related to ES performance			
Year	Contract Identification		Total Contract Amount (In Bhutanese Currency (BTN)
[insert year]	Contract Identification: *[indicate complete contract name/ number, and any other identification]* Name of Employer: *[insert full name]* Address of Employer: *[insert street/city/country]* Reason(s) for calling of performance security: *[indicate main reason(s) e.g. for gender-based violence; sexual exploitation, or sexual abuse breaches]*		*[insert amount]*

Form FIN – 3.1 Financial Situation and Performance

Bidder's Name: _____
Date: _____
JV Member's Name_____
RFB No. and title: _____
Page _____of _____pages

1. Financial data

Type of Financial information in (Bhutanese currency (BTN)	**Historic information for previous Three (3) financial years** _____*years,* **(amount in currency, currency, exchange rate*, USD equivalent)**		
	Year 1 (2021)	Year 2 2022	Year 3 2023
Statement of Financial Position (Information from Balance Sheet)			
Total Assets (TA)			
Total Liabilities (TL)			
Total Equity/Net Worth (NW)			
Current Assets (CA)			
Current Liabilities (CL)			
Working Capital (WC)			
Information from Income Statement			
Total Revenue (TR)			
Profits Before Taxes (PBT)			
Cash Flow Information			

Cash Flow from Operating Activities			

*Refer to ITB 15 for the exchange rate

2. Sources of Finance

Specify sources of finance to meet the cash flow requirements on works currently in progress and for future contract commitments.

No.	Source of finance	Amount (BTN)
1		
2		
3		
4		

2. Financial documents

The Bidder and its parties shall provide copies of financial statements for **last 3 (Three)** years pursuant Section III, Evaluation and Qualifications Criteria, Sub-factor 3.1. The financial statements shall:

(a) reflect the financial situation of the Bidder or in case of JV member, and not an affiliated entity (such as parent company or group member).

(b) be independently audited or certified in accordance with local legislation.

(c) be complete, including all notes to the financial statements.

(d) correspond to accounting periods already completed and audited.

☐ Attached are copies of financial statements[12] for the _____years required above; and complying with the requirements

[12] If the most recent set of financial statements is for a period earlier than 12 months from the date of bid, the reason for this should be justified.

Form FIN – 3.2 Average Annual Construction Turnover

Bidder's Name: _____
Date: _____
JV Member's Name_____
RFB No. and title: _____
Page _____of _____pages

	Annual turnover data (construction only)		
Year	**Amount in Bhutanese Currency (BTN)**	~~**Exchange rate**~~	~~**USD equivalent**~~
[indicate year]	*[insert amount and indicate currency]*		
2025			
2024			
2023			
2022			
2021			
Average Annual Construction Turnover *			

* See Section III, Evaluation and Qualification Criteria, Sub-Factor 3.2.

Form FIN – 3.3 Financial Resources

Specify proposed sources of financing, such as liquid assets, unencumbered real assets, lines of credit, and other financial means, net of current commitments, available to meet the total construction cash flow demands of the subject contract or contracts as specified in Section III (Evaluation and Qualification Criteria)

Financial Resources		
No.	**Source of financing**	**Amount (BTN)**
1		
2		
3		
4		

Form FIN – 3.4 Current Contract Commitments / Works in Progress

Bidders and each member to a JV should provide information on their current commitments on all contracts that have been awarded, or for which a letter of intent or acceptance has been received, or for contracts approaching completion, but for which an unqualified, full completion certificate has yet to be issued.

Current Contract Commitments

No.	Name of Contract	Employer's Contact Address, Tel, Fax	Value of Outstanding Work [Current BTN Equivalent]	Estimated Completion Date	Average Monthly Invoicing Over Last Six Months [BTN/month)]
1					
2					
3					
4					
5					
6					

Form EXP - 4.1 General Construction Experience

Bidder's Name: _____
Date: _____
JV Member's Name_____
RFB No. and title: _____
Page _____of _____pages

Starting Year	Ending Year	Contract Identification	Role of Bidder
		Contract name: _____ Brief Description of the Works performed by the Bidder: _____ Amount of contract: _____ Name of Employer: _____ Address: _____	
		Contract name: _____ Brief Description of the Works performed by the Bidder: _____ Amount of contract: _____ Name of Employer: _____ Address: _____	
		Contract name: _____ Brief Description of the Works performed by the Bidder: _____ Amount of contract: _____ Name of Employer: _____ Address: _____	

Form EXP - 4.2(a) Specific Construction and Contract Management Experience

Bidder's Name: _____
Date: _____
JV Member's Name_____
RFB No. and title: _____
Page _____of _____pages

Similar Contract No.	**Information**			
Contract Identification				
Award date				
Completion date				
Role in Contract	Prime Contractor	Member in JV	Management Contractor	Sub-contractor
Total Contract Amount			BTN	
If member in a JV or sub-contractor, specify participation in total Contract amount				
Employer's Name:				
Address: Telephone/fax number E-mail:				

Form EXP - 4.2(a) (cont.) Specific Construction and Contract Management Experience (cont.)

Similar Contract No.	Information
Description of the similarity in accordance with Sub-Factor 4.2(a) of Section III:	
1. Amount	
2. Physical size of required works items	
3. Complexity	
4. Methods/Technology	
5. Construction rate for key activities	
6. Other Characteristics	

Form EXP - 4.2(b) Construction Experience in Key Activities

Bidder's Name: _____
Date: _____
Bidder's JV Member Name: _____
Sub-contractor's Name[13] (as per ITB 34.2 and 34.3): _____
RFB No. and title: _____

Page _____of _____pages

All Sub-contractors for key activities must complete the information in this form as per ITB 33.2 and 33.3 and Section III, Qualification Criteria and Requirements, Sub-Factor 4.2.

1. Key Activity No One: _____

	Information			
Contract Identification				
Award date				
Completion date				
Role in Contract	Prime Contractor	Member in JV	Management Contractor	Sub-contractor
Total Contract Amount			BTN	
Quantity (Volume, number or rate of production, as applicable) performed under the contract per year or part of the year	Total quantity in the contract (i)	Percentage participation (ii)		Actual Quantity Performed (i) x (ii)
(2026)				
(2025)				
(2024)				
(2023)				
(2022)				
(2021)				

[13] If applicable

	Information
Employer's Name:	
Address: Telephone/fax number E-mail:	

2. Activity No. Two

3. ……

	Information
Description of the key activities in accordance with Sub-Factor 4.2(b) of Section III:	

Form EXP - 4.2(c) Specific Experience in Managing ES aspects

[The following table shall be filled in for contracts performed by the Bidder, and each member of a Joint Venture]

Bidder's Name: _____
Date: _____
Bidder's JV Member Name: _____
RFB No. and title: _____
Page _____of _____pages

1. Key Requirement no 1 in accordance with 4.2 (c): _____

Contract Identification				
Award date				
Completion date				
Role in Contract	Prime Contractor ☐	Member in JV ☐	Management Contractor ☐	Subcontractor ☐
Total Contract Amount			BTN	
Details of relevant experience				

2. Key Requirement no 2 in accordance with 4.2 (c): _____
3. Key Requirement no 3 in accordance with 4.2 (c): _____

Appendix E to Technical Part: Bid Security

Form of Demand Guarantee

Beneficiary: _____

Request for Bids No: _____

Date: _____

BID GUARANTEE No.: _____

Guarantor: _____

We have been informed that _____ (hereinafter called "the Applicant") has submitted or will submit to the Beneficiary its Bid (hereinafter called "the Bid") for the execution of _____ under Request for Bids No. _____ ("the RFB").

Furthermore, we understand that, according to the Beneficiary's conditions, bids must be supported by a bid guarantee.

At the request of the Applicant, we, as Guarantor, hereby irrevocably undertake to pay the Beneficiary any sum or sums not exceeding in total an amount of _____ (_____) upon receipt by us of the Beneficiary's complying demand, supported by the Beneficiary's statement, whether in the demand itself or a separate signed document accompanying or identifying the demand, stating that either the Applicant:

(a) has withdrawn its Bid prior to the Bid validity expiry date set forth in the Applicant's Letter of Bid, or any extended date provided by the Applicant; or

(b) having been notified of the acceptance of its Bid by the Beneficiary prior to the expiry date of the Bid validity or any extension thereto provided by the Applicant, (i) has failed to execute the contract agreement, or (ii) has failed to furnish the performance security, and, if required, the Environmental and Social (ES) Performance Security, in accordance with the Instructions to Bidders ("ITB") of the Beneficiary's bidding document.

This guarantee will expire: (a) if the Applicant is the successful Bidder, upon our receipt of copies of the contract agreement signed by the Applicant and the Performance Security and, if required, the Environmental and Social (ES) Performance Security, issued to the Beneficiary in relation to such contract agreement; or (b) if the Applicant is not the successful Bidder, upon the earlier of (i) our receipt of a copy of the Beneficiary's notification to the Applicant of the results of the Bidding process; or (ii) twenty-eight days after the expiry date of the Bid validity.

Consequently, any demand for payment under this guarantee must be received by us at the office indicated above on or before that date.

This guarantee is subject to the Uniform Rules for Demand Guarantees (URDG) 2010 Revision, ICC Publication No. 758.

_____

[Signature]

Form of Bid-Securing Declaration

[The Bidder shall fill in this Form in accordance with the instructions indicated.]

Date: [date (as day, month and year)]
Bid No.: [number of RFB process]
Alternative No.: [insert identification No if this is a Bid for an alternative]

To: [complete name of Purchaser]
We, the undersigned, declare that:

We understand that, according to your conditions, Bids must be supported by a Bid Securing Declaration.

We accept that we are required to pay the Bid Security amount of **BTN 179,960.00 (One Hundred Seventy-Nine Thousand Nine Hundred Sixty)** only within 5 days of your instruction and failure to do so will debar us from being eligible for Bidding in any contract with all the Government Procuring Agencies for the period prescribed in the Debarment Rules if we are in breach of our obligation(s) under the Bid conditions, because we:

a. have withdrawn our Bid during the period of Bid validity specified by the Bidder in the Form of Bid; or
b. having not accepted the correction of errors in accordance with the Instructions to Bidders ITB; or
c. Having been notified of the acceptance of our Bid by the Procuring Agency during the period of Bid validity, (i) fail or refuse to furnish the performance security in accordance with the ITB, or (ii) fail or refuse to execute the Contract in accordance with the ITB.

We understand this Bid Securing Declaration shall expire if we are not the successful Bidder, upon the earlier of (i) our receipt of your notification to us of the name of the successful Bidder; or (ii) twenty-eight days after the expiry date of the Bid validity.

Name of the Bidder*_
Name of the person duly authorized to sign the Bid on behalf of the Bidder**_____
Title of the person signing the Bid_____
Signature of the person named above_____
Date signed _____ day of _____,

*: In the case of the Bid submitted by joint venture specify the name of the Joint Venture as Bidder
**: Person signing the Bid shall have the power of attorney given by the Bidder attached to the Bid

[Note: In case of a Joint Venture, the Bid-Securing Declaration must be in the name of all members to the Joint Venture that submits the Bid.]

Letter of Bid - Financial Part

INSTRUCTIONS TO BIDDERS: DELETE THIS BOX ONCE YOU HAVE COMPLETED THE DOCUMENT

The Bidder must prepare this Letter of Bid on stationery with its letterhead clearly showing the Bidder's complete name and business address.

Note: All italicized text in black font is to help Bidders in preparing this form.

Date of this Bid submission: [*insert date (as day, month and year) of Bid submission*]
Request for Bid No.: [*insert identification*]
Alternative No.: [*insert identification No if this is a Bid for an alternative*]

To: **[*insert complete name of Employer*]**

We, the undersigned, hereby submit the second part of our Bid, the Bid Price and Bill of Quantities. This accompanies the Letter of Technical Part.

In submitting our Bid, we make the following additional declarations:

(a) **Bid Validity**: Our Bid shall be valid until *[insert day, month and year in accordance with ITB 18.1]*, and it shall remain binding upon us and may be accepted at any time on or before this date;

(b) **Total Price**: The total price of our Bid, excluding any discounts offered in item (f) below is: [Insert one of the options below as appropriate]

[Option 1, in case of one lot:] Total price is: [*insert the total price of the Bid in words and figures, indicating the various amounts and the respective currencies*];

Or

[Option 2, in case of multiple lots:] (a) Total price of each lot [*insert the total price of each lot in words and figures, indicating the various amounts and the respective currencies*]; and (b) Total price of all lots (sum of all lots) [*insert the total price of all lots in words and figures, indicating the various amounts and the respective currencies*];

(c) **Discounts:** The discounts offered and the methodology for their application are:

(i) The discounts offered are: [*Specify in detail each discount offered*]

(ii) The exact method of calculations to determine the net price after application of discounts is shown below: [*Specify in detail the method that shall be used to apply the discounts*];

(d) **Commissions,** gratuities **and fees:** We have paid, or will pay the following commissions, gratuities, or fees with respect to the Bidding process or execution of the Contract: [*insert complete name of each Recipient, its full address, the reason for which each commission or gratuity was paid and the amount and currency of each such commission or gratuity*].

Name of Recipient	Address	Reason	Amount

(If none has been paid or is to be paid, indicate "none.")

Name of the Bidder:*[*insert complete name of the Bidder*]

Name of the person duly authorized to sign the Bid on behalf of the Bidder: ** [*insert complete name of person duly authorized to sign the Bid*]

Title of the person signing the Bid: [*insert complete title of the person signing the Bid*]

Signature of the person named above: [*insert signature of person whose name and capacity are shown above*]

Date signed [*insert date of signing*] **day of** [*insert month*], [*insert year*]

*: In the case of the Bid submitted by a Joint Venture specify the name of the Joint Venture as Bidder.

**: Person signing the Bid shall have the power of attorney given by the Bidder. The power of attorney shall be attached with the Bid Schedules

Appendix A to Financial Part: Schedules

Bill of Quantities

Refer to Volume II of Bid Documents

Section V - Eligible Countries

Eligibility for the Provision of Goods, Works and Non-consulting Services in Bank-Financed Procurement

In reference to ITB 4.8 and ITB 5.1, for the information of the Bidders, at the present time firms, goods and services from the following countries are excluded from this Bidding process:

Under ITB 4.8 (a) and ITB 5.1: None

Under ITB 4.8 (b) and ITB 5.1: None

Section VI - Fraud and Corruption

(Section VI shall not be modified)

1. Purpose

1.1 The Bank's Anti-Corruption Guidelines and this annex apply with respect to procurement under Bank Investment Project Financing operations.

2. Requirements

2.1 The Bank requires that Borrowers (including beneficiaries of Bank financing); bidders, (applicants/proposers), consultants, contractors and suppliers; any sub-contractors, sub-consultants, service providers or suppliers; any agents (whether declared or not); and any of their personnel, observe the highest standard of ethics during the procurement process, selection and contract execution of Bank-financed contracts, and refrain from Fraud and Corruption.

2.2 To this end, the Bank:

a. Defines, for the purposes of this provision, the terms set forth below as follows:

i. "corrupt practice" is the offering, giving, receiving, or soliciting, directly or indirectly, of anything of value to influence improperly the actions of another party;

ii. "fraudulent practice" is any act or omission, including misrepresentation, that knowingly or recklessly misleads, or attempts to mislead, a party to obtain financial or other benefit or to avoid an obligation;

iii. "collusive practice" is an arrangement between two or more parties designed to achieve an improper purpose, including to influence improperly the actions of another party;

iv. "coercive practice" is impairing or harming, or threatening to impair or harm, directly or indirectly, any party or the property of the party to influence improperly the actions of a party;

v. "obstructive practice" is:

(a) deliberately destroying, falsifying, altering, or concealing of evidence material to the investigation or making false statements to investigators in order to materially impede a Bank investigation into allegations of a corrupt, fraudulent, coercive, or collusive practice; and/or threatening, harassing, or intimidating any party to prevent it from disclosing its knowledge of matters relevant to the investigation or from pursuing the investigation; or

(b) acts intended to materially impede the exercise of the Bank's inspection and audit rights provided for under paragraph 2.2 e. below.

b. Rejects a proposal for award if the Bank determines that the firm or individual recommended for award, any of its personnel, or its agents, or its sub-consultants, sub-

contractors, service providers, suppliers and/ or their employees, has, directly or indirectly, engaged in corrupt, fraudulent, collusive, coercive, or obstructive practices in competing for the contract in question;

c. In addition to the legal remedies set out in the relevant Legal Agreement, may take other appropriate actions, including declaring misprocurement, if the Bank determines at any time that representatives of the Borrower or of a recipient of any part of the proceeds of the loan engaged in corrupt, fraudulent, collusive, coercive, or obstructive practices during the procurement process, selection and/or execution of the contract in question, without the Borrower having taken timely and appropriate action satisfactory to the Bank to address such practices when they occur, including by failing to inform the Bank in a timely manner at the time they knew of the practices;

d. Pursuant to the Bank's Anti- Corruption Guidelines and in accordance with the Bank's prevailing sanctions policies and procedures, may sanction a firm or individual, either indefinitely or for a stated period of time, including by publicly declaring such firm or individual ineligible (i) to be awarded or otherwise benefit from a Bank-financed contract, financially or in any other manner;[14] (ii) to be a nominated[15] sub-contractor, consultant, manufacturer or supplier, or service provider of an otherwise eligible firm being awarded a Bank-financed contract; and (iii) to receive the proceeds of any loan made by the Bank or otherwise to participate further in the preparation or implementation of any Bank-financed project;

e. Requires that a clause be included in bidding/request for proposals documents and in contracts financed by a Bank loan, requiring (i) bidders (applicants/proposers), consultants, contractors, and suppliers, and their sub-contractors, sub-consultants, service providers, suppliers, agents personnel, permit the Bank to inspect[16] all accounts, records and other documents relating to the procurement process, selection and/or contract execution,, and to have them audited by auditors appointed by the Bank.

---

14 For the avoidance of doubt, a sanctioned party's ineligibility to be awarded a contract shall include, without limitation, (i) applying for pre-qualification, expressing interest in a consultancy, and bidding, either directly or as a nominated sub-contractor, nominated consultant, nominated manufacturer or supplier, or nominated service provider, in respect of such contract, and (ii) entering into an addendum or amendment introducing a material modification to any existing contract.

15 A nominated sub-contractor, nominated consultant, nominated manufacturer or supplier, or nominated service provider (different names are used depending on the particular bidding document) is one which has been: (i) included by the bidder in its pre-qualification application or bid because it brings specific and critical experience and know-how that allow the bidder to meet the qualification requirements for the particular bid; or (ii) appointed by the Borrower.

16 Inspections in this context usually are investigative (i.e., forensic) in nature. They involve fact-finding activities undertaken by the Bank or persons appointed by the Bank to address specific matters related to investigations/audits, such as evaluating the veracity of an allegation of possible Fraud and Corruption, through the appropriate mechanisms. Such activity includes but is not limited to: accessing and examining a firm's or individual's financial records and information, and making copies thereof as relevant; accessing and examining any other documents, data and information (whether in hard copy or electronic format) deemed relevant for the investigation/audit, and making copies thereof as relevant; interviewing staff and other relevant individuals; performing physical inspections and site visits; and obtaining third party verification of information.

PART 2 – Works' Requirements

Section VII - Works' Requirements

Refer to Volume II of Bid Documents
Sub-Section 1: BOQs
Sub-Section 2: Drawings
Sub-Section 3: Technical Specifications
Sub-Section 4: ESMP

Sub-Section 1 & 3: Bill Of Quantities (BOQ) and Technical Specifications

Civil Works – Green House

SN	BSR Code	Particulars	Qty	Unit	Rate in Figure	Rate in Words	Amount
1	EW0002	Surface dressing of ground, including removal of vegetations and inequalities < 150mm deep, disposal of rubbish within 50m lead and 1.5m lifts- All types of Soil	900.00	Sqm			
2	EW0031	Earth work in excavation over areas, depth >300mm, width >1.5m, area >10 Sq.m on plan, including disposal of excavated earth within 50m lead and 1.5m lift & disposed soil to be neatly dressed-All types of soil	742.50	Cum			
3	EW0106	Excavation in foundation trenches or drains not exceeding 1.5m in width or area 10 sq.m on plan, including dressing & ramming, disposal of surplus soil within 50m lead & 1.5m lift	17.40	Cum			
4	SM0072	Providing and laying Hand packed stone filling or soling with stones	117.27	Cum			
5	CW0006	Providing and laying in position plain cement concrete excluding the cost of centering and shuttering - All work upto plinth level.- 1:3:6 (1 cement : 3 sand : 6 graded crushed rock 40 mm nominal size)- at Base of first tread laying	66.10	Cum			
6	PL0020	Providing & laying 12mm cement plaster- C.M 1:3	456.30	Sqm			
7	BW0020	Providing & laying Half-brick Masonry (125 mm) in superstructure below floor 2 level- In cement mortar 1:3	451.62	Sqm			
8	SW0030	Providing & fixing in position with vertical channels 20x10x2mm and braced with flat iron, diagonals 20x5mm with top and bottom rails of T-iron 40x40x6mm with 38mm dia steel pulleys complete with bolts, nuts, locking arrangement, stoppers handles including applying a priming coat of red lead paint-Collapsible steel shutters	12.25	Sqm			
9	DR0032	Constructing random rubble masonry open surface drain in cement mortar 1:6 including earth work in excavation, 100mm thick concrete base 1:5:10, 40 mm aggregate 25mm thick cement concrete 1:2:4, 12mm aggregate for filling haunches, including 20mm cement plaster with a floating coat of neat cement and disposal of surplus earth- 250mm wide x 300mm average depth	130.00	m			

		Tank Support					
10	SM0072	Providing and laying Hand packed stone filling or soling with stones	5.40	Cum			
11	CW0006	Providing and laying in position plain cement concrete excluding the cost of centering and shuttering - All work upto plinth level.- 1:3:6 (1 cement : 3 sand : 6 graded crushed rock 40 mm nominal size)- at Base of first tread laying	3.60	Cum			
12	SM0006	Providing & laying Random Rubble Masonry with hard stone in foundation & plinth- In cement mortar 1:5	8.88	Cum			
13	A/R	Providing & fixing plastic tank including all accessories complete- 5000 litre capacity with triple Layer Rabten Made with complete accessories	3.00	No			
14	DR0001	Providing and laying Plinth Protection and grouted with fine sand mix including well rammed, finishing the top smooth- With 50mm thick cement concrete 1:3:6, 20mm aggregates, laid over 75mm thick layer of compacted gravel (40mm)	145.20	Sqm			
		R/Wall					
15	EW0002	Surface dressing of ground, including removal of vegetations and inequalities <150mm deep, disposal of rubbish within 50m lead and 1.5m lifts - All types of soil	109.50	Sqm			
16	EW0031	Earthwork in excavation over areas, depth >300mm, width >1.5m, area >10Sq.m on plan, including disposal of excavated earth within 50m lead and 1.5m lift & disposed soil to be neatly dressed - All types of soil	8.04825	Cum			
17	CW0005	Providing and laying in position plain cement concrete excluding the cost of centering and shuttering - All work upto plinth level. - 1:3:6 (1 cement : 3 sand : 6 graded crushed rock 20 mm nominal size)	8.04825	Cum			
18	SM0005	Providing & laying Random Rubble Masonry with hard stone in foundation & plinth-In cement mortar 1:4	43.44	Kg			
19	OHS001	Incorporation of Occupational Health and Safety measures at construction sites as per the attached requirements list.The standards and specifications for the Insurance, OHS materials and (or) equipment shall be in compliance with the Labour and Employment Act - 2007, Regulation on Occupational Health, Safety and Welfare - 2022, and other relevant national documents. All OHS items	1	No			

		will remain as the property of the bidder upon completion of the project.					
20	OHS002	Providing temporary living accommodation which includes bedroom, kitchen, and toilet cum bathroom including proper water supply and electricity as per the drawing and temporary living accommodation standards. The accommodation facilities must be dismantled and cleaned upon the completion of project. All reusable materials of the accommodation facilities will remain as the property of the bidder upon completion of the project.	1	No			
Total							
5% GST							
Grand Total							

CIVIL WORKS FOR STORE

SN	Code	Particulars	Qty	Unit	Rate in Figure	Rate in Words	Amount
1	EW0002	Surface dressing of ground, including removal of vegetations and inequalities < 150mm deep, disposal of rubbish within 50m lead and 1.5m lifts- All types of Soil	59.5	Sqm			
2	EW0031	Earth work in excavation over areas, depth >300mm, width >1.5m, area >10 Sq.m on plan, including disposal of excavated earth within 50m lead and 1.5m lift & disposed soil to be neatly dressed-All types of soil	17.85	Cum			
3	EW0106	Excavation in foundation trenches or drains not exceeding 1.5m in width or area 10 sq.m on plan, including dressing & ramming, disposal of surplus soil within 50m lead & 1.5m lift	9.135	Cum			
4	SM0072	Providing and laying Hand packed stone filling or soling with stones	8.5065	Cum			
5	CW0006	Providing and laying in position plain cement concrete excluding the cost of centering and shuttering - All work upto plinth level.- 1:3:6 (1 cement : 3 sand : 6 graded crushed rock 40 mm nominal size)- at Base of first tread laying	1.422	Cum			
6	SM0005	Providing &laying Ramdom Rubble Masonry with hard stone d in foundation & plinth- In cement mortar 1:4-Plinth Level	10.44	Cum			
7	BW0146 I	Providing & laying locally manufactured concrete brick in Foundation & Plinth-n cement mortar 1:4	19.005	Cum			

8	PL0020	Providing & laying 12mm cement plaster-C.M 1:3	66.5	Sqm			
9	WW0021	Providing & fixing joists, including hoisting, applying wood preservative on unexposed surfaces-Class 'B' (conifer) Over ceiling	0.6045	Cum			
10	WW0130	Providing & fixing Plywood lining with necessary nails etc. including beading complete (excluding cost of frame)- 4 mm, commercial-Ceiling	43.66	Sqm			
11	WW0055	Providing & fixing Class 'B' (conifer) (undressed) in wall-frames etc.	0.221625	Cum			
12	WW0060	Providing & fixing roof framing, in trusses, purlins, rafters, posts, post plates including hoisting, etc. (excluding steel items)-Class 'B' (conifer)	2.89215	Cum			
13	WW0003	Providing & fixing in position dressed wood work in frames of doors, windows, clerestory windows and other frames, wrought and framed-Class 'B' (conifer)	0.17908	Cum			
14	WW0221	Providing & fixing 38mm thick Panelled or glazed doors and windows Shutters etc. complete including hinges-Class 'B' (conifer)	3.15	Sqm			
15	WW0536	Providing & fixing M.S tower bolt (barrel type) with necessary screws etc. complete-150mm	1	No			
16	WW0546	Providing & fixing M.S. sliding door bolt, bright finished, enamelled with necessary screws etc. complete-250mm	1	No			
17	WW0556	Providing & fixing M.S. handle with necessary screws etc. complete-125mm	4	No			
18	WW0328	Providing & fixing expanded metal 20x60mm strands 3.25x1.6mm including 60x20mm beading of Class 'B' (conifer)	6	Sqm			
19	FL0051	Providing & laying cement concrete flooring 1:2:4, finished with floating coat of neat cement-20mm aggregates, 40mm thick	43.66	Sqm			
20	RF0003	Providing & fixing Pre - Painted Galvanised Iron (PPGI) sheets, including bolts, hooks and nuts 8mm dia. with bitumen and G.I limpet washers filled with white lead for connection, excluding the cost of purlins, rafter and trusses.- 25g (0.50mm)	85	Sqm			
21	RF0007	Providing & fixing 600 mm ridges or hips in Pre - Painted Galvanised Iron (PPGI) sheets, including bolts, hooks and nuts 8mm dia G.I limpet and bitumen washers for connection-25g. (0.50mm)	10	m			

22	DR0001	Providing and laying Plinth Protection and grouted with fine sand mix including well rammed, finishing the top smooth-With 50mm thick cement concrete 1:3:6, 20mm aggregates, laid over 75mm thick layer of compacted gravel (40mm)	32	Sqm			
23	DR0011	Constructing brick masonry open surface drain in cement mortar 1:4 including earth work in excavation 100 mm thick concrete bed 1:5:10, 40mm aggregate and 25mm thick cement concrete 1:2:4,12 mm aggregate for filling haunches including 12mm cement plastering 1:4 with a floating coat of neat cement and disposal of surplus earth etc. complete-150mm wide x 200mm average depth	25	m			
Total							
5% GST							
Grand Total							

CIVIL WORKS - GREENHOUSE

SN	Code	Description	Unit	Quantity	Rate in Figure	Rate in Words	Amount
1	**SW0022**	Steel work welded, in built up sections, trusses, frame-works including cutting, hoisting, fixing and appl. priming coat of red lead paint-tubular	kg				
		(60x60x5) mm		5216.2465			
		(40x40x5) mm		6039.35668			
2	**SM0072**	Providing and laying Hand packed stone filling or soling with stones	cu.m	58			
3	**RC0090**	Providing & fixing centering and shuttering (formwork) using Timber, including strutting, propping etc. and removal of formwork - Foundations, Footings and all works upto Plinth Level, etc.	sq.m	232			
4	**CW0002**	Providing and laying in position plain cement concrete excluding the cost of centering and shuttering - All work upto plinth level.-1:1.5:3 (1 cement : 1.5 sand : 3 graded crushed rock 20 mm nominal size)	cu.m	58			
5	**AR**	P&f 10 mm Polycarbonate transparent sheet including 10mm with self diving screw, glazing bar/ H-Profile and end cap with silicone sealant sealing	Sq.m	1337.549			
6	**AR**	Providing and fixing of 32 mesh stainless steel wire mesh (SS304 0.5-0.7 mm) for the ventilations,.	sq.m				
		Openings		44			
7	**AR**	Retractable aluminate shading net,pulley and wire mechanism	rolls	5			
8	**SW0046**	Providing & fixing anodised Aluminium section for doors, windows, ventilators, partitions framing, false ceiling framing of specified sections including all accessories such as U-rubber gasket for fixing glass panes, weather strips or weather seals, roller, springs, etc complete (excluding the cost of glass panes or boards in case of partitions/doors/windows and ceiling boards in case of ceiling)	kg				

		For door					
		top frame (50x50x2 mm)		29.12			
		Vertical frame (40x40x 2 mm)		13.6			
		Horizontal frame (40x40x2mm)		15.3			
		For windows/ventilations					
		top frame (50x50x2 mm)		332.8			
		Vertical frame (40x40x 2 mm)		272			
		Horizontal frame (40x40x2mm)		136			
Total							
5% GST							
Grand Total							

Electrical Works – Green House

SN	Code	Description of the items	Qty.	Unit	Rate in Figure	Rate in Words	Amount
A.	POINT WIRING						
1		Wiring for points in excess length above long points with 1.1kV grade, PVC insulated copper conductor cable in PVC casing and capping including connections,painting, testing and commissioning etc. as required					
i)	**WP0186**	Extra Long (LED bulb-6,Circulation Fan-6	209.00	m			
ii)	**WP0187**	Long point (Socket-4)	95.00	m			
2		Wiring for lighting circuit with 1.1kV grade, PVC insulated copper conductor cable in PVC casing & capping including connections, painting, testing & commissioning etc. as required					
	WP0196	Exhaust Fan	50.00	m			
3		Wiring for lighting circuit with 1.1kV grade, PVC insulated copper conductor cable in PVC surface conduit including connections, painting, testing and commissioning etc. as required					
i)	**WC0251**	2x2.5sq.mm (DB box to Circuit)	10.00	m			
4		Wiring for 3 pin, 16 ampere plug point with 4 sq.mm 1.1kV grade, PVC insulated copper conductor cable in PVC surface conduit with providing and fixing 3 pin, 16 ampere socket outlet and switch including earthing the third pin, connections, painting, testing and commissioning etc. as required					
i)	**WC0211**	Medium Point (DB Box to power socket)	2.00				
ii)	**WC0212**	Long point (DB Box to Power Socket)	8.00	Point			
5		Wiring for points in excess length above long points with 1.1kV grade, PVC insulated copper conductor cable in PVC surface conduit including connections, painting, testing and commissioning etc. as required					
i)	**WC0242**	2 x 4 sq.mm (Lighting Point Excess length)	10.00	m			

6	**AR**	Supplying,Installation,testing and comissioning of LED Bulb with all accessories					
		LED Bulb (60Watt)	6	Each			
7	**A/R**	Supplying,Installation,Testing and Comissioning of Circulation Fan with all accessories					
		Circulation fan(a. single phase 0.75HP b. 500 mm dia c. 1400 rpm	6	Each			
8	**AR**	Supplying,Installation, Testing and comissioning of Exhaust Fan with all accessories					
		Exhaust Fan (a) Size 1.3 x1.3 x 0.4m b) Single phase, 1.1kW c) High velocity 20,000CFM or 33,500 m3/hr	2	Each			
10		Supply & fixing of SPN distribution board (DIN type) with metal door, 230 volt A.C complete with all accessories without MCB/isolator/RCCB out going or incoming etc. as required					
	GB0525	16 way	1	Each			
11		Supply & Installation, testing & commissioning of miniature circuit breaker (MCB) single pole, 230 volt A.C complete with all accessories suitable to fix on a dinbaretc. as required					
	GB0271	10 A	5	each			
	GB0290	6A	5	each			
12		Supply & Installation, testing & commissioning of miniature circuit breaker (MCB) C-series, double pole , 230 volt A.C in main control board / sub distribution board complete with all accessories suitable to fix on a dinbar etc. as required					
	GB0292	MCB-2P; 63A	4.00	Each			
13		Supplying & Installation, testing & commissioning of panel moulded case circuit breaker (MCCB) with electronic release, breaking capacity 36KA, 3 pole 415 volt A.C complete with all accessories etc. as required					
	GB0211	MCCB-160A	1.00	Each			

14		Supplying, installation, testing & commissioining of pre-fabricated MS busbar chamber with copper busbar complete with all accessories etc. as required					
	GB0002	4 strips, 300mm bar, 100A	1.00	Each			
15		Supply & Installation, testing & commissioning of miniature circuit breaker (MCB) SPN, 230 volt A.C complete with all accessories suitable to fix on a din-bar etc. as required					
	GB0297	63A	1.00	Each			
	Power cables						
16		Supplying of 2- Core 1.1KV grade PVC insulated and sheathed Aluminium conductor armoured power cables					
	PC0124	16sqmm	400	m			
Total							
5% GST							
Grand Total							

Sub- Section 2: Drawings (Architectural, Structural and Electrical)

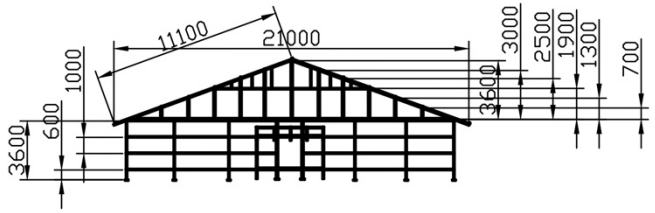

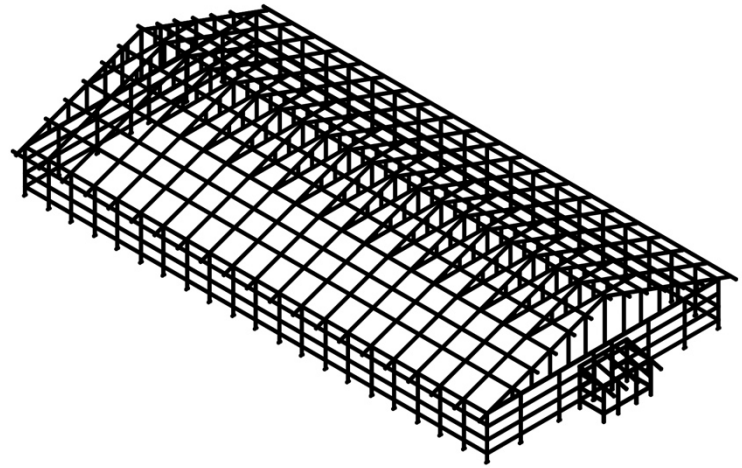

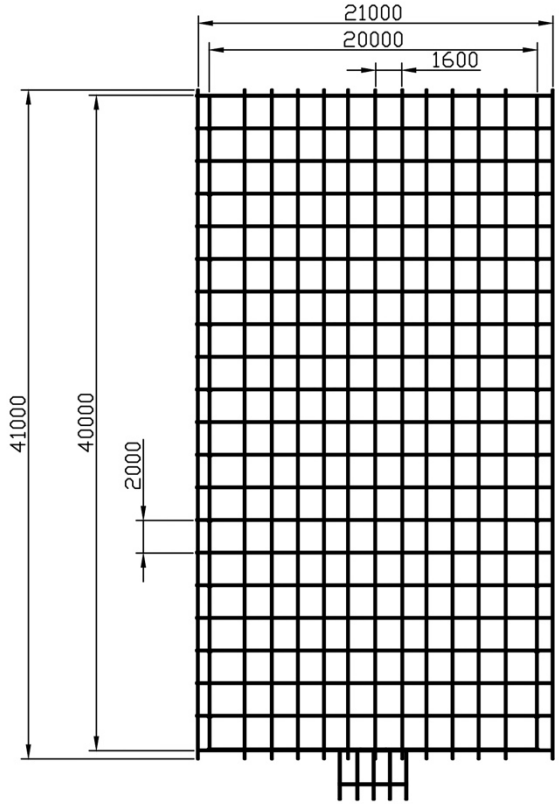

All Dimensions in mm

Materials

1	Main Pillars and beams	MS tube 60x60x5 mm
2	Trusses	MS Tube 40x40x5 mm
3	Strut	MS Tube 40x40x5 mm
4	Control room	MS Tube 40x40x5 mm
5	Alternative Pillars	MS Tube 40x40x5 mm
6	Purlins	MS Tube 40x40x5 mm

Drawn:Sagar Mongar	A M T C	
Jr. Mechanical Engineer		
Drawing 1 of 1	Title: ARC Structure	Drawing no. : 2
Date: 10/09/2026	Location: Phobjikha	Checked By:Ugyen Dorji
Scale : 1:350	Sheet Size: A4	Assistant Engineer

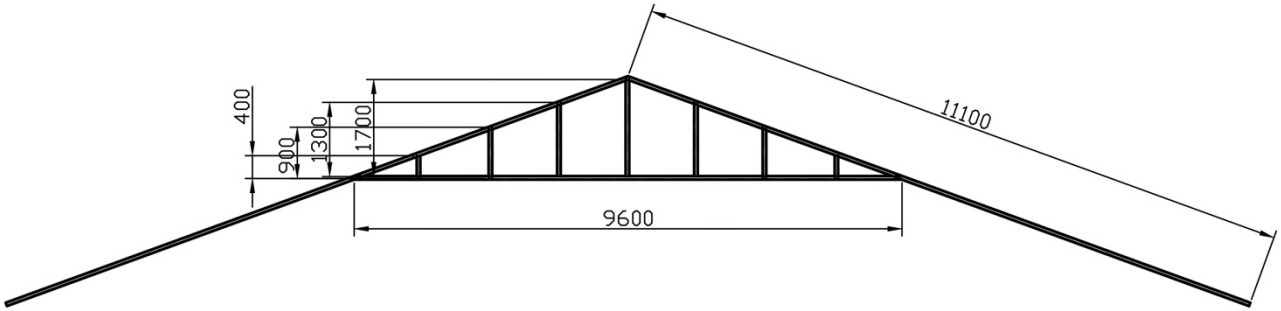

All Dimensions in mm

Drawn:Sagar Mongar	A M T C	
Jr. Mechanical Engineer		
Drawing 1 of 1	Title: Control Room	Drawing no. : 1
Date: 10/09/2026		Checked By:Ugyen Dorji
Scale : 1:100	Sheet Size: A4	Assistant Engineer

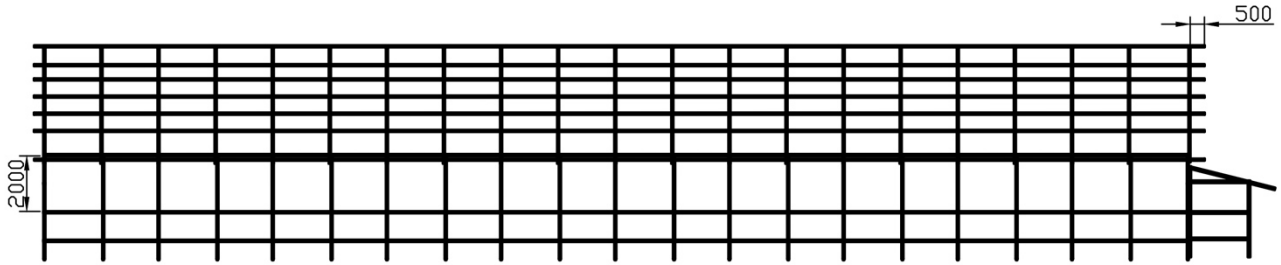

Side View

All Dimensions in mm

Drawn:Sagar Mongar	A M T C	
Jr. Mechanical Engineer		
Drawing 1 of 1	Title: ARC Structure	Drawing no. : 2
Date: 10/09/2026	Location: Phobjikha	Checked By:Ugyen Dorji
Scale : 1:350	Sheet Size: A4	Assistant Engineer

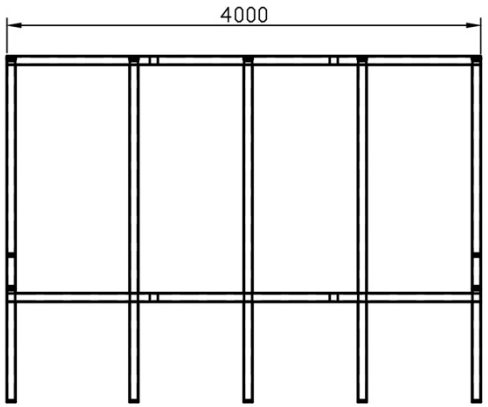

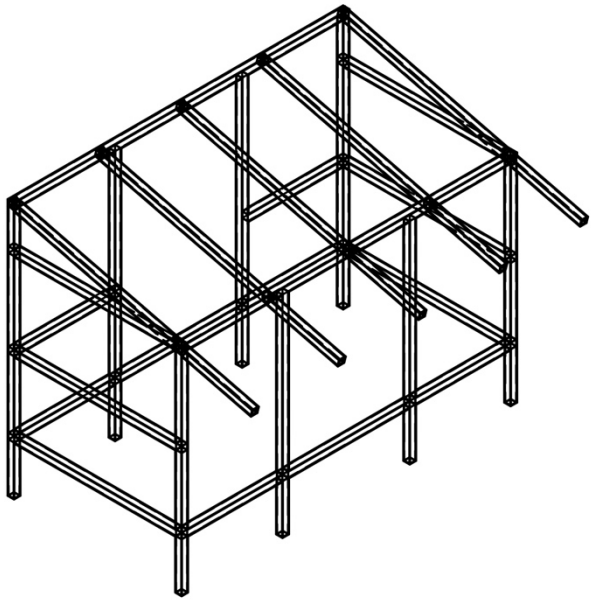

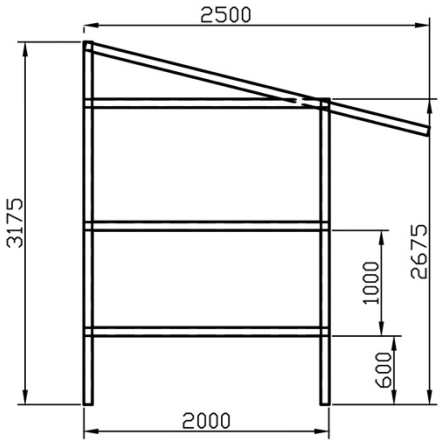

All Dimensions in mm

Drawn:Sagar Mongar	AMTC	
Jr. Mechanical Engineer		
Drawing 1 of 1		Drawing no. : 1
Date: 10/09/2026	Title: Control Room	Checked By:Ugyen Dorji
Scale : 1:50	Sheet Size: A4	Assistant Engineer

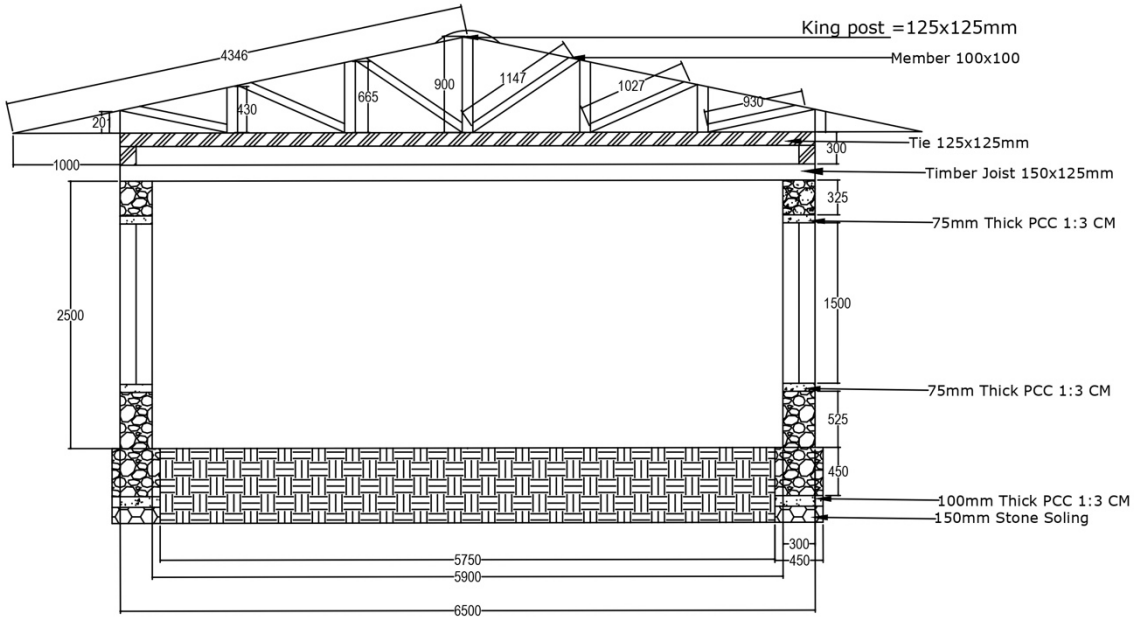

Project Name: Store at RAC	Date:	24/09/2026:
Drawing Name: Section A-A	Drawn by:	Sangay Duba

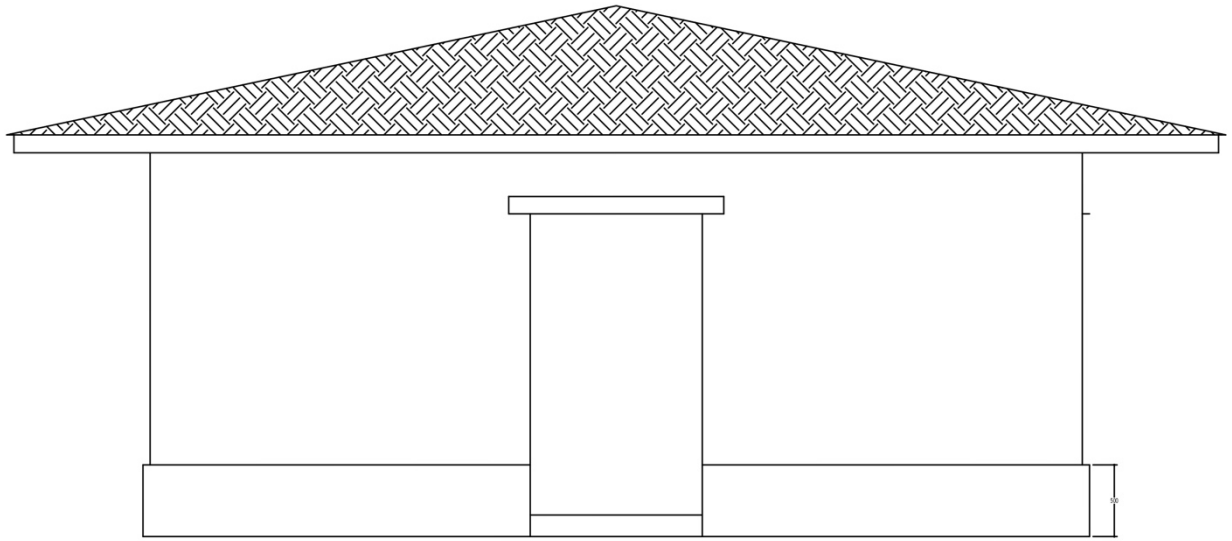

Project Name: Store at RAC	Date:	24/09/2026:
Drawing Name: Front Elevation	Drawn by:	Sangay Duba

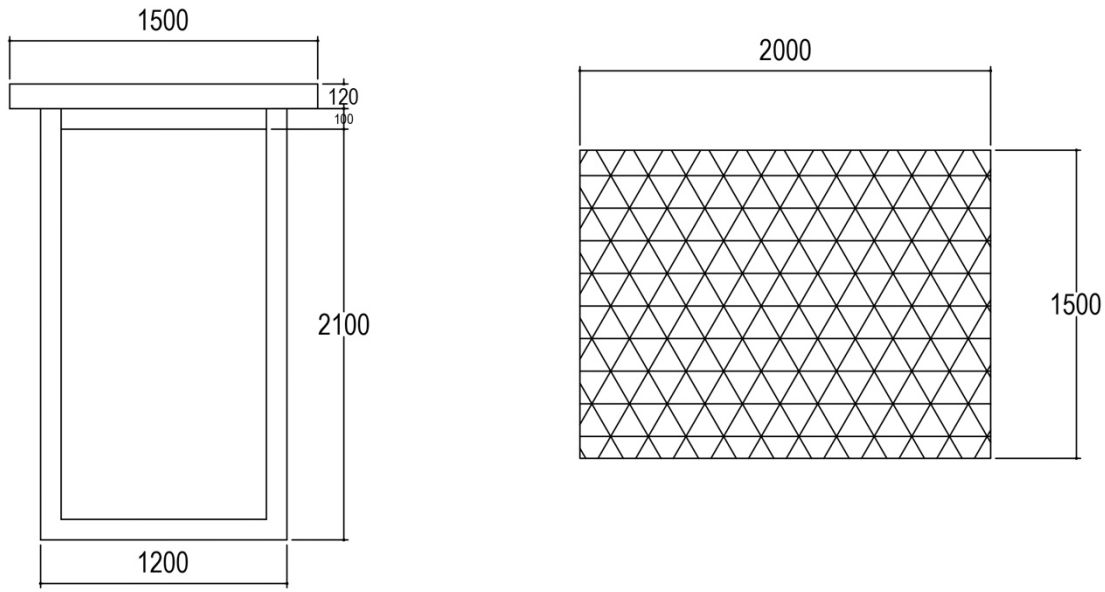

Project Name: Store at RAC	Date:	24/09/2026:
Drawing Name: Window and Door	Drawn by:	Sangay Duba

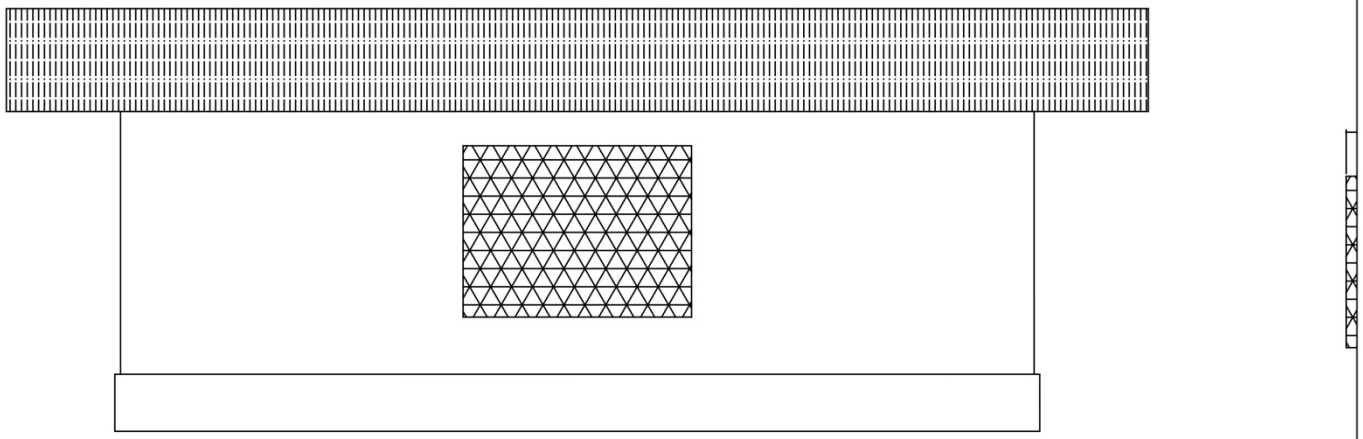

Project Name: Store at RAC	Date:	24/09/2026:
Drawing Name: Back Elevation	Drawn by:	Sangay Duba

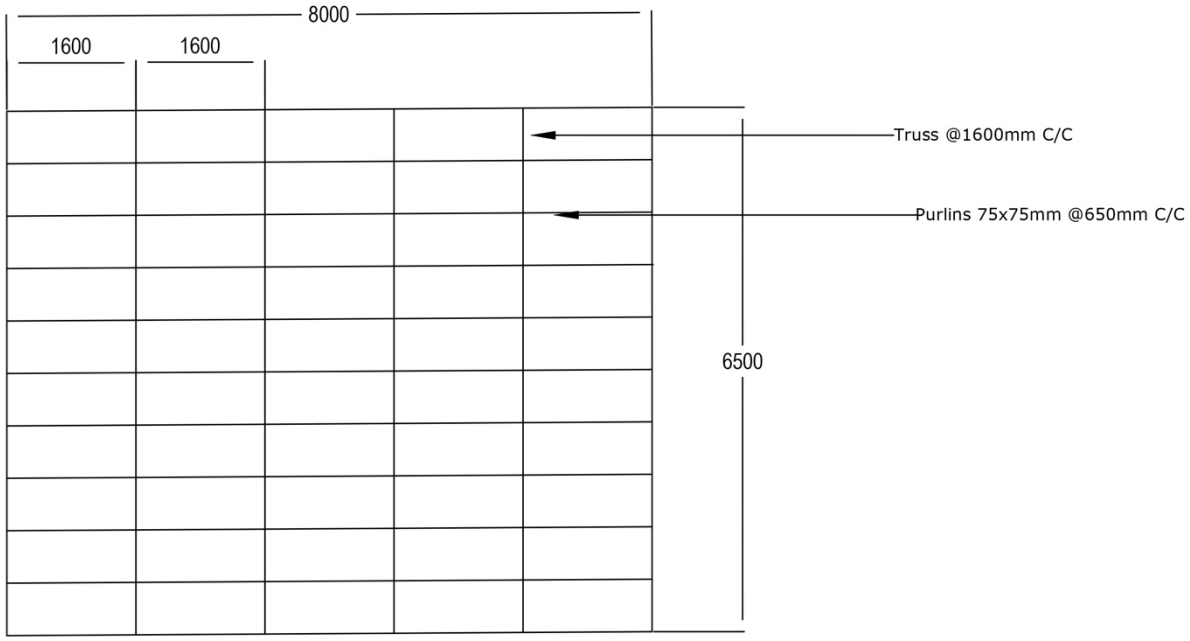

Project Name: Store at RAC	Date:	24/09/2026:
Drawing Name:Roof Truss plan	Drawn by:	Sangay Duba

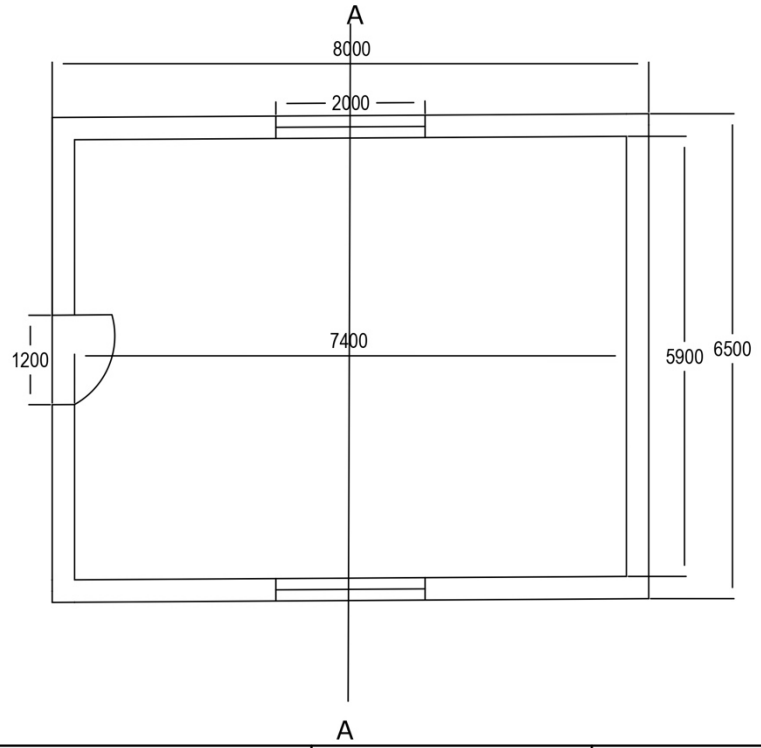

Project Name: Store at RAC	Date:	24/09/2026:
Drawing Name: Plan	Drawn by:	Sangay Duba

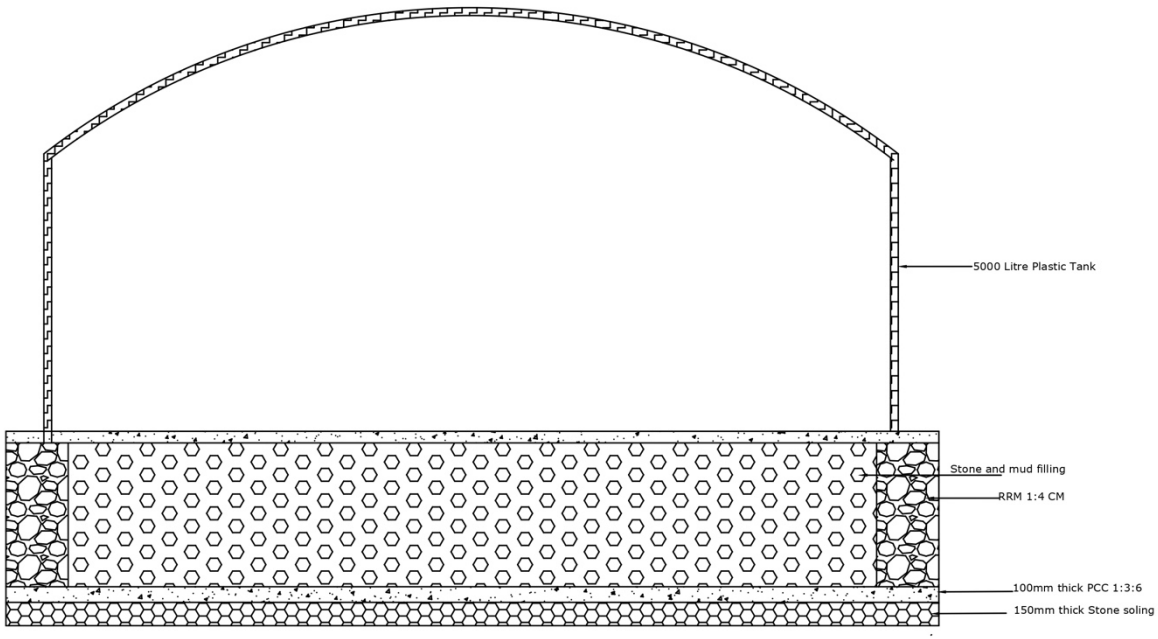

Project Name: Store at RAC	Date:	24/09/2026:
Drawing Name:Tank Support	Drawn by:	Sangay Duba

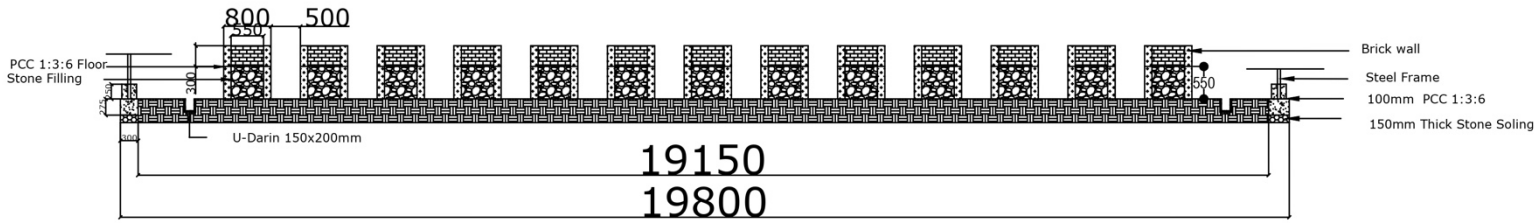

Project Name: Green House for RAC	Date:	24/09/2026:
Drawing Name: Section A-A	Drawn by:	Sangay Duba

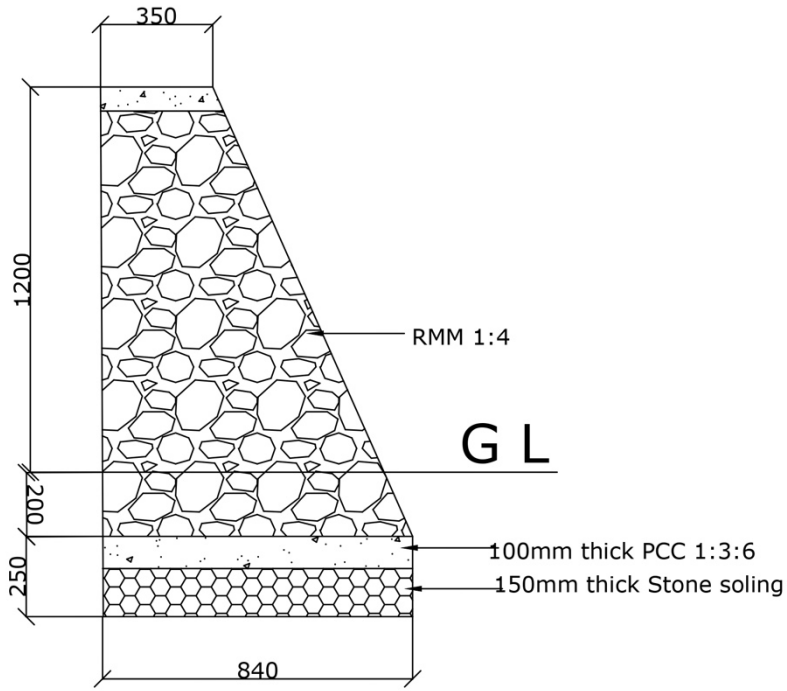

Project Name: Store at RAC	Date:	24/09/2026:
Drawing Name:R/Wall	Drawn by:	Sangay Duba

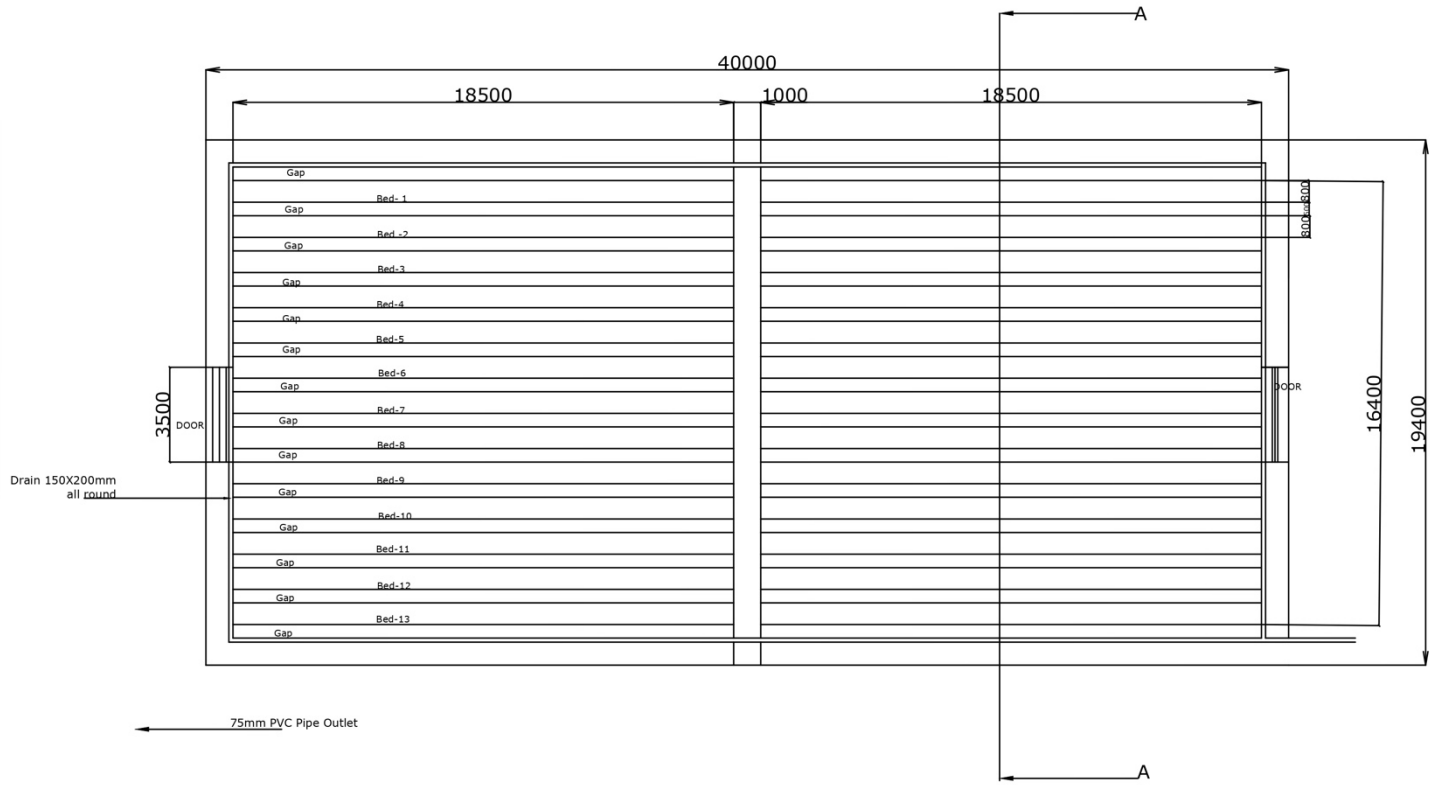

Project Name: Green House for RAC	Date:	24/09/2026:
Drawing Name: Plan	Drawn by:	Sangay Duba

Sub-Section 4: ENVIRONMENT & SOCIAL MANAGEMENT PLAN FORMAT TO MITIGATE THE RISK (ESMP)

Environmental and social risk/impact	Mitigation measure (Bidders to provide)
Excess Muck from excavation works: - Foundation excavation will generate excess muck. There is risk of improper disposal in and around the locality affecting the vegetation.	
Construction vehicular traffic: - Increased traffic use of road by project vehicles will affect the safety of the community and the project workers.	
Air Pollution: - Air quality can be adversely affected by vehicle exhaust emissions and combustion of fuels. Dust generation from construction sites, material stockpiles and access roads are a nuisance in the environment and can be a health hazard. Noise and vibration may have an impact on people, property, neighborhood, community, livestock and the natural environment.	
Generation waste: Waste (solid & liquid including chemical) generated from civil work/ renovation. Waste generated from the labor campsite.	
Workers's Health and Safety: - Occupational Health & Safety(OHS)-Without adequate OHS measures, workers may be at risk of accident	

- Accidents/incidents-Lack of first aid facilities and health care facilities in the immediate vicinity will aggravate the health conditions of the victims - Water and sanitation facilities-Lack of water sanitation facilities at project sites cause inconvenience to the workers and affect their personal hygiene. - Training-Lack of awareness and basic knowledge in health care among the construction workforce make them susceptible to potential diseases.	
Grievance: Grievance by the workers and workplace concerns and inaccessibility to internal grievance redress mechanism by the labourers may lead to discontentment among the workers.	
Labor and Working Conditions- associated risks such as sexual exploitation and abuse/sexual harassment (SEA/SH), labor influx, and unethical labor practices.	
All activities- Fire Safety, Emergency Procedures	

PART 3 – Conditions of Contract and Contract Forms

Section VIII - General Conditions of Contract

These General Conditions of Contract (GCC), read in conjunction with the Particular Conditions of Contract (PCC) and other documents listed therein, should be a complete document expressing fairly the rights and obligations of both parties.

These General Conditions of Contract have been developed on the basis of considerable international experience in the drafting and management of contracts, bearing in mind a trend in the construction industry towards simpler, more straightforward language.

The GCC can be used for both smaller admeasurement contracts and lump sum contracts.

Table of Clauses

A. General 131
1. Definitions 131
2. Interpretation 134
3. Language and Law 134
4. Project Manager's Decisions 135
5. Delegation 135
6. Communications 135
7. Subcontracting 135
8. Other Contractors 135
9. Personnel and Equipment 136
10. Employer's and Contractor's Risks 142
11. Employer's Risks 142
12. Contractor's Risks 143
13. Insurance 143
14. Site Data 143
15. Contractor to Construct the Works 143
16. The Works to Be Completed by the Intended Completion Date 144
17. Approval by the Project Manager 144
18. Health, Safety and Protection of the Environment 145
19. Archaeological and Geological Findings 148
20. Possession of the Site 148
21. Access to the Site 148
22. Instructions, Inspections and Audits 148
23. Appointment of the Adjudicator 149
24. Procedure for Disputes 149
25. Fraud and Corruption 150
26. Stakeholder Engagement 150
27. Suppliers (other than Subcontractors) 150
28. Code of Conduct 151
29. Security of the Site 152

B. Time Control 152
30. Program and Progress Reports 152
31. Extension of the Intended Completion Date 154
32. Acceleration 154
33. Delays Ordered by the Project Manager 154
34. Management Meetings 154
35. Early Warning 154

C. Quality Control 155
36. Identifying Defects 155
37. Tests 155
38. Correction of Defects 155
39. Uncorrected Defects 155

D. Cost Control 155
40. Contract Price 155
41. Changes in the Contract Price 156

42. Variations 156
43. Cash Flow Forecasts 158
44. Payment Certificates 158
45. Payments 159
46. Compensation Events 159
47. Tax 161
48. Currencies 161
49. Price Adjustment 161
50. Retention 162
51. Liquidated Damages 162
52. Bonus 162
53. Advance Payment 162
54. Securities 163
55. Dayworks 163
56. Cost of Repairs 163

E. Finishing the Contract 164
57. Completion 164
58. Taking Over 164
59. Final Account 164
60. Operating and Maintenance Manuals 164
61. Termination 164
62. Payment upon Termination 165
63. Property 166
64. Release from Performance 166
65. Suspension of Bank Loan or Credit 166

General Conditions of Contract

A. General

1. Definitions

1.1 Boldface type is used to identify defined terms.

(a) The **Accepted Contract Amount** means the amount accepted in the Letter of Acceptance for the execution and completion of the Works and the remedying of any defects.

(b) The **Activity Schedule** is a schedule of the activities comprising the construction, installation, testing, and commissioning of the Works in a lump-sum contract. It includes a lump-sum price for each activity, which is used for valuations and for assessing the effects of Variations and Compensation Events (**Not Applicable**).

(c) The **Adjudicator** is the person appointed jointly by the Employer and the Contractor to resolve disputes in the first instance, as provided for in GCC 23.

(d) **Bank** means the financing institution **named in the PCC**.

(e) **Bill of Quantities** means the priced and completed Bill of Quantities forming part of the Bid.

(f) **Compensation Events** are those defined in GCC Clause 42 hereunder.

(g) The **Completion Date** is the date of completion of the Works as certified by the Project Manager, in accordance with GCC Sub-Clause 57.1.

(h) The **Contract** is the Contract between the Employer and the Contractor to execute, complete, and maintain the Works. It consists of the documents listed in GCC Sub-Clause 2.3 below.

(i) The **Contractor** is the party whose Bid to carry out the Works has been accepted by the Employer.

(j) The **Contractor's Bid** is the completed bidding document submitted by the Contractor to the Employer.

(k) The **Contract Price** is the Accepted Contract Amount stated in the Letter of Acceptance and thereafter as adjusted in accordance with the Contract.

(l) **Days** are calendar days; months are calendar months.

(m) **Dayworks** are varied work inputs subject to payment on a time basis for the Contractor's employees and Equipment, in addition to payments for associated Materials and Plant (**Not Applicable**).

(n) A **Defect** is any part of the Works not completed in accordance with the Contract.

(o) The **Defects Liability Certificate** is the certificate issued by Project Manager upon correction of defects by the Contractor.

(p) The **Defects Liability Period** is the period **named in the PCC** pursuant to GCC Sub-Clause 38.1 and calculated from the Completion Date.

(q) **Drawings** means the drawings of the Works, as included in the Contract, and any additional and modified drawings issued by (or on behalf of) the Employer in accordance with the Contract, include calculations and other information provided or approved by the Project Manager for the execution of the Contract.

(r) The **Employer** is the party who employs the Contractor to carry out the Works, **as specified in the PCC**.

(s) **Equipment** is the Contractor's machinery and vehicles brought temporarily to the Site to construct the Works.

(t) "**In writing"** or "**written"** means hand-written, type-written, printed or electronically made, and resulting in a permanent record;

(u) The **Initial Contract Price** is the Contract Price listed in the Employer's Letter of Acceptance.

(v) The **Intended Completion Date** is the date on which it is intended that the Contractor shall complete the Works. The **Intended Completion Date** is specified in the PCC. The **Intended Completion Date** may be revised only by the Project Manager by issuing an extension of time or an acceleration order.

(w) **Materials** are all supplies, including consumables, used by the Contractor for incorporation in the Works.

(x) **Plant** is any integral part of the Works that shall have a mechanical, electrical, chemical, or biological function.

(y) The **Project Manager** is the person named in the PCC (or any other competent person appointed by the Employer and notified to the Contractor, to act in replacement of the Project Manager) who is responsible for supervising the execution of the Works and administering the Contract.

(z) **PCC** means Particular Conditions of Contract.

(aa) The **Site** is the area defined as such in the PCC.

(bb) **Site Investigation Reports** are those that were included in the bidding document and are factual and interpretative reports about the surface and subsurface conditions at the Site.

(cc) **Specification** means the Specification of the Works included in the Contract and any modification or addition made or approved by the Project Manager.

(dd) The **Start Date** is **given in the PCC**. It is the latest date when the Contractor shall commence execution of the Works. It does not necessarily coincide with any of the Site Possession Dates.

(ee) A **Subcontractor** is a person or corporate body who has a Contract with the Contractor to carry out a part of the work in the Contract, which includes work on the Site.

(ff) **Temporary Works** are works designed, constructed, installed, and removed by the Contractor that are needed for construction or installation of the Works.

(gg) A **Variation** is an instruction given by the Project Manager which varies the Works.

(hh) The **Works** are what the Contract requires the Contractor to construct, install, and turn over to the Employer, as defined in the PCC.

(ii) "**Contractor's Personnel**" refers to all personnel whom the Contractor utilizes on the Site or other places where the Works are carried out, including the staff, labor and other employees of each Subcontractor.

(jj) **"Key Personnel"** means the positions (if any) of the Contractor's personnel that are stated in the Specification.

(kk) **"ES"** means Environmental and Social (including Sexual Exploitation and Abuse (SEA), and Sexual Harassment (SH)).

(ll) **"Sexual Exploitation and Abuse" "(SEA)"** means the following:

Sexual Exploitation is defined as any actual or attempted abuse of position of vulnerability, differential power or trust, for sexual purposes, including, but not limited to, profiting monetarily, socially or politically from the sexual exploitation of another;

Sexual Abuse is defined as the actual or threatened physical intrusion of a sexual nature, whether by force or under unequal or coercive conditions.

(mm) **"Sexual Harassment" "(SH)"** is defined as unwelcome sexual advances, requests for sexual favors, and other verbal or physical conduct of a sexual nature by the Contractor's Personnel with other Contractor's or Employer's Personnel; and

(nn) "**Employer's Personnel"** refers to the Project Manager and all other staff, labor and other employees (if any) of the Project Manager and of the Employer engaged in fulfilling the Employer's obligations under the Contract; and any other personnel identified as Employer's Personnel, by a notice from the Employer or the Project Manager to the Contractor.

2. Interpretation

2.1 In interpreting these GCC, words indicating one gender include all genders. Words indicating the singular also include the plural and words indicating the plural also include the singular. Headings have no significance. Words have their normal meaning under the language of the Contract unless specifically defined. The Project Manager shall provide instructions clarifying queries about these GCC.

2.2 If sectional completion is **specified in the PCC**, references in the GCC to the Works, the Completion Date, and the Intended Completion Date apply to any Section of the Works (other than references to the Completion Date and Intended Completion Date for the whole of the Works).

2.3 The documents forming the Contract shall be interpreted in the following order of priority:

(a) Agreement,

(b) Letter of Acceptance,

(c) Contractor's Bid,

(d) Particular Conditions of Contract,

(e) General Conditions of Contract, including Appendices,

(f) Specifications,

(g) Drawings,

(h) Bill of Quantities,[17] and

(i) any other document **listed in the PCC** as forming part of the Contract.

3. Language and Law

3.1 The language of the Contract and the law governing the Contract are **stated in the PCC**.

[17] In lump-sum contracts, delete "Bill of Quantities" and replace with "Activity Schedule."

3.2 Throughout the execution of the Contract, the Contractor shall comply with the import of goods and services prohibitions in the Employer's country when

(a) as a matter of law or official regulations, the Borrower's country prohibits commercial relations with that country; or

(b) by an act of compliance with a decision of the United Nations Security Council taken under Chapter VII of the Charter of the United Nations, the Borrower's Country prohibits any import of goods from that country or any payments to any country, person, or entity in that country.

4. Project Manager's Decisions

4.1 Except where otherwise specifically stated, the Project Manager shall decide contractual matters between the Employer and the Contractor in the role representing the Employer.

5. Delegation

5.1 Unless otherwise **specified in the PCC,** the Project Manager may delegate any of his duties and responsibilities to other people, except to the Adjudicator, after notifying the Contractor, and may revoke any delegation after notifying the Contractor.

6. Communications

6.1 Communications between parties that are referred to in the Conditions shall be effective only when in writing. A notice shall be effective only when it is delivered.

7. Subcontracting

7.1 The Contractor may subcontract with the approval of the Project Manager, but may not assign the Contract without the approval of the Employer in writing. Subcontracting shall not alter the Contractor's obligations. The Contractor shall require that its Subcontractors execute the Works in accordance with the Contract, including complying with the relevant ES requirements and the obligations set out in Sub-Clause 28.1.

8. Other Contractors

8.1 The Contractor shall cooperate and share the Site with other contractors, public authorities, utilities, and the Employer between the dates given in the Schedule of Other Contractors, as **referred to in the PCC.** The Contractor shall also provide facilities and services for them as described in the Schedule. The Employer may modify the Schedule of Other Contractors, and shall notify the Contractor of any such modification.

8.2 The Contractor shall also, as stated in the Specifications or as instructed by the Project Manager, cooperate with and allow appropriate opportunities for the Employer's or any other personnel, notified to the Contractor by the Employer or Project Manager, to conduct any environmental and social assessment.

9. Personnel and Equipment

9.1 The Contractor shall employ the Key Personnel and use the Equipment identified in its Bid, to carry out the Works or other personnel and Equipment approved by the Project Manager. The Project Manager shall approve any proposed replacement of Key Personnel and Equipment only if their relevant qualifications or characteristics are substantially equal to or better than those proposed in the Bid.

9.2 The Project Manager may require the Contractor to remove (or cause to be removed) any person employed on the Site or Works, including the Key Personnel (if any), who:

(a) persists in any misconduct or lack of care;

(b) carries out duties incompetently or negligently;

(c) fails to comply with any provision of the Contract;

(d) persists in any conduct which is prejudicial to safety, health, or the protection of the environment;

(e) based on reasonable evidence, is determined to have engaged in Fraud and Corruption during the execution of the Works;

(f) has been recruited from the Employer's Personnel;

(g) undertakes behavior which breaches the Code of Conduct for Contractor's Personnel (ES).

If appropriate, the Contractor shall then promptly appoint (or cause to be appointed) a suitable replacement with equivalent skills and experience.

Notwithstanding any requirement from the Project Manager to remove or cause to remove any person, the Contractor shall take immediate action as appropriate in response to any violation of (a) through (g) above. Such immediate action shall include removing (or causing to be removed) from the Site or other places where the Works are being carried out, any Contractor's Personnel who engages in (a), (b), (c), (d), (e) or (g) above or has been recruited as stated in (f) above."

9.3 The Contractor shall take all necessary safety measures to avoid the occurrence of incidents and injuries to any third party associated with the use of, if any, Equipment on public roads or other public infrastructure. The Contractor shall monitor road safety incidents and accidents to identify negative safety issues, and establish and implement necessary measures to resolve them.

9.4 Labor

9.4.1 *Engagement of Staff and Labor.* The Contractor shall provide and employ on the Site for the execution of the Works such

skilled, semi-skilled and unskilled labor as is necessary for the proper and timely execution of the Contract. The Contractor is encouraged, to the extent practicable and reasonable, to employ staff and labor with appropriate qualifications and experience from sources within the Country.

Unless otherwise provided in the Contract, the Contractor shall be responsible for the recruitment, transportation, accommodation and welfare facilities in accordance with GCC Sub-Clause 9.4.6, of the Contractor's Personnel, and for all payments in connection therewith.

The Contractor shall provide the Contractor's Personnel information and documentation that are clear and understandable regarding their terms and conditions of employment. The information and documentation shall set out their rights under relevant labor laws applicable to the Contractor's Personnel (which will include any applicable collective agreements), including their rights related to hours of work, wages, overtime, compensation and benefits, as well as those arising from any requirements in the Specifications. The Contractor's Personnel shall be informed when any material changes to their terms or conditions of employment occur.

9.4.2 *Conditions of Labor.* The Contractor shall inform the Contractor's Personnel about:

(a) any deduction to their payment and the conditions of such deductions in accordance with the applicable laws or as stated in the Specifications; and

(b) their liability to pay personal income taxes in the Country in respect of such of their salaries, wages, allowances and any benefits as are subject to tax under the laws of the Country for the time being in force.

The Contractor shall perform such duties in regard to such deductions thereof as may be imposed on him by such laws.

Where required by applicable laws or as stated in the Specifications, the Contractor shall provide the Contractor's Personnel written notice of termination of employment and details of severance payments in a timely manner. The Contractor shall have paid the Contractor's Personnel (either directly or where appropriate for their benefit) all due wages and entitlements including, as applicable, social security benefits and pension contributions, on or before the end of their engagement/ employment.

9.4.3 The Contractor may bring in to the Country any foreign personnel who are necessary for the execution of the Works to the extent allowed by the applicable Laws. The Contractor shall

ensure that these personnel are provided with the required residence visas and work permits. The Employer will, if requested by the Contractor, use its best endeavors in a timely and expeditious manner to assist the Contractor in obtaining any local, state, national, or government permission required for bringing in the Contractor's personnel.

9.4.4 The Contractor shall at its own expense provide the means of repatriation to and the Contractor's Personnel employed on the Contract at the Site to their various home countries. It shall also provide suitable temporary maintenance of all such persons from the cessation of their employment on the Contract to the date programmed for their departure. In the event that the Contractor defaults in providing such means of transportation and temporary maintenance, the Employer may provide the same to such personnel and recover the cost of doing so from the Contractor.

9.4.5 *Disorderly conduct.* The Contractor shall at all times during the progress of the Contract use its best endeavors to prevent any unlawful, riotous or disorderly conduct or behavior by or amongst the Contractor's Personnel.

9.4.6 *Facilities for Staff and Labor.* Except as otherwise stated in the Specification, the Contractor shall provide and maintain all necessary accommodation and welfare facilities for the Contractor's Personnel. If stated in the Specification, the Contractor shall give access to or provide services that accommodate the physical, social and cultural needs of the Contractor's Personnel. The Contractor shall also provide similar facilities for the Employer's Personnel if stated in the Specifications.

9.4.7 The Contractor shall, in all dealings with the Contractor's Personnel, pay due regard to all recognized festivals, official holidays, religious or other customs and all local laws and regulations pertaining to the employment of labor. The Contractor shall provide the Contractor's Personnel annual holiday and sick, maternity and family leave, as required by applicable laws or as stated in the Specifications.

9.4.8 *Supply of Foodstuff*s. The Contractor shall arrange for the provision of a sufficient supply of suitable food as may be stated in the Specification at reasonable prices for the Contractor's Personnel for the purposes of or in connection with the Contract.

9.4.9 *Supply of Water*. The Contractor shall, having regard to local conditions, provide on the Site an adequate supply of drinking and other water for the use of the Contractor's Personnel.

9.4.10 *Measures against Insect and Pest Nuisance.* The Contractor shall at all times take the necessary precautions to protect the Contractor's Personnel employed on the Site from insect and pest nuisance, and to reduce the danger to their health. The Contractor shall comply with all the regulations of the local health authorities, including use of appropriate insecticide.

9.4.11 *Alcoholic Liquor or Drugs*. The Contractor shall not, otherwise than in accordance with the laws of the Country, import, sell, give, barter or otherwise dispose of any alcoholic liquor or drugs, or permit or allow importation, sale, gift, barter or disposal thereto by Contractor's Personnel.

9.4.12 *Arms and Ammunition*. The Contractor shall not give, barter, or otherwise dispose of, to any person, any arms or ammunition of any kind, or allow Contractor's Personnel to do so.

9.4.13 *Funeral Arrangements.* The Contractor shall be responsible, to the extent required by local regulations, for making any funeral arrangements for any of its local employees who may die while engaged upon the Works.

9.4.14 *Forced Labor.* The Contractor, including its Subcontractors, shall not employ or engage forced labor. Forced labor consists of any work or service, not voluntarily performed, that is exacted from an individual under threat of force or penalty, and includes any kind of involuntary or compulsory labor, such as indentured labor, bonded labor or similar labor-contracting arrangements.

No persons shall be employed or engaged who have been subject to trafficking. Trafficking in persons is defined as the recruitment, transportation, transfer, harboring or receipt of persons by means of the threat or use of force or other forms of coercion, abduction, fraud, deception, abuse of power, or of a position of vulnerability, or of the giving or receiving of payments or benefits to achieve the consent of a person having control over another person, for the purposes of exploitation.

9.4.15 *Child Labor*. The Contractor, including its Subcontractors, shall not employ or engage a child under the age of 14 unless the national law specifies a higher age (the minimum age).

The Contractor, including its Subcontractors, shall not employ or engage a child between the minimum age and the age of 18 in a manner that is likely to be hazardous, or to interfere with, the child's education, or to be harmful to the child's health or physical, mental, spiritual, moral, or social development.

The Contractor including its Subcontractors, shall only employ or engage children between the minimum age and the age of 18 after an appropriate risk assessment has been conducted by the Contractor with the Project Manager's

approval. The Contractor shall be subject to regular monitoring by the Project Manager that includes monitoring of health, working conditions and hours of work.

Work considered hazardous for children is work that, by its nature or the circumstances in which it is carried out, is likely to jeopardize the health, safety, or morals of children. Such work activities prohibited for children include work:

(a) with exposure to physical, psychological or sexual abuse;

(b) underground, underwater, working at heights or in confined spaces;

(c) with dangerous machinery, equipment or tools, or involving handling or

(d) transport of heavy loads;

(e) in unhealthy environments exposing children to hazardous substances, agents, or processes, or to temperatures, noise or vibration damaging to health; or

(f) under difficult conditions such as work for long hours, during the night or in confinement on the premises of the employer.

9.4.16 *Employment Records of Workers.* The Contractor shall keep complete and accurate records of the employment of labor at the Site. The records shall include the names, ages, genders, hours worked, and wages paid to all workers. These records shall be summarized on a monthly basis and submitted to the project Manager.

9.4.17 *Workers' Organizations*. In countries where the relevant labor laws recognize workers' rights to form and to join workers' organizations of their choosing and to bargain collectively without interference, the Contractor shall comply with such laws. In such circumstances, the role of legally established workers' organizations and legitimate workers' representatives will be respected, and they will be provided with information needed for meaningful negotiation in a timely manner. Where the relevant labor laws substantially restrict workers' organizations, the Contractor shall enable alternative means for the Contractor's Personnel to express their grievances and protect their rights regarding working conditions and terms of employment. The Contractor shall not seek to influence or control these alternative means. The Contractor shall not discriminate or retaliate against the Contractor's Personnel who participate, or seek to participate, in such organizations and collective bargaining or alternative mechanisms. Workers' organizations are expected to fairly represent the workers in the workforce.

9.4.18 *Non-Discrimination and Equal Opportunity.* The Contractor shall not make decisions relating to the employment or treatment of Contractor's Personnel on the basis of personal characteristics unrelated to inherent job requirements. The Contractor shall base the employment of Contractor's Personnel on the principle of equal opportunity and fair treatment, and shall not discriminate with respect to any aspects of the employment relationship, including recruitment and hiring, compensation (including wages and benefits), working conditions and terms of employment, access to training, job assignment, promotion, termination of employment or retirement, and disciplinary practices.

Special measures of protection or assistance to remedy past discrimination or selection for a particular job based on the inherent requirements of the job shall not be deemed discrimination. The Contractor shall provide protection and assistance as necessary to ensure non-discrimination and equal opportunity, including for specific groups such as women, people with disabilities, migrant workers and children (of working age in accordance with GCC Sub-Clause 9.4.15).

9.4.19 *Contractor's Personnel Grievance Mechanism.* The Contractor shall have a grievance mechanism for Contractor's Personnel, and where relevant the workers' organizations stated in GCC Sub-Clause 9.4.17, to raise workplace concerns. The grievance mechanism shall be proportionate to the nature, scale, risks and impacts of the Contract. The mechanism shall address concerns promptly, using an understandable and transparent process that provides timely feedback to those concerned in a language they understand, without any retribution, and shall operate in an independent and objective manner.

The Contractor's Personnel shall be informed of the grievance mechanism at the time of engagement for the Contract, and the measures put in place to protect them against any reprisal for its use. Measures will be put in place to make the grievance mechanism easily accessible to all Contractor's Personnel.

The grievance mechanism shall not impede access to other judicial or administrative remedies that might be available, or substitute for grievance mechanisms provided through collective agreements.

The grievance mechanism may utilize existing grievance mechanisms, providing that they are properly designed and implemented, address concerns promptly, and are readily accessible to Contractor's Personnel. Existing grievance mechanisms may be supplemented as needed with Contract-specific arrangements.

9.4.20 *Training of Contractor's Personnel.* The Contractor shall provide appropriate training to relevant Contractor's Personnel on ES aspects of the Contract, including appropriate sensitization on prohibition of SEA and SH, and health and safety training referred to in GCC Sub-Clause 18.2.

As stated in the Specifications or as instructed by the Project Manager, the Contractor shall also allow appropriate opportunities for the relevant Contractor's Personnel to be trained on ES aspects of the Contract by the Employer's Personnel.

The Contractor shall provide training on SEA and SH, including its prevention, to any of its personnel who has a role to supervise other Contractor's Personnel.

10. Employer's and Contractor's Risks

10.1 The Employer carries the risks which this Contract states are Employer's risks, and the Contractor carries the risks which this Contract states are Contractor's risks.

11. Employer's Risks

11.1 From the Start Date until the Defects Liability Certificate has been issued, the following are Employer's risks:

53. The risk of personal injury, death, or loss of or damage to property (excluding the Works, Plant, Materials, and Equipment), which are due to

53.1 use or occupation of the Site by the Works or for the purpose of the Works, which is the unavoidable result of the Works or

53.2 negligence, breach of statutory duty, or interference with any legal right by the Employer or by any person employed by or contracted to him except the Contractor.

54. The risk of damage to the Works, Plant, Materials, and Equipment to the extent that it is due to a fault of the Employer or in the Employer's design, or due to war or radioactive contamination directly affecting the country where the Works are to be executed.

11.2 From the Completion Date until the Defects Liability Certificate has been issued, the risk of loss of or damage to the Works, Plant, and Materials is an Employer's risk except loss or damage due to

(a) a Defect which existed on the Completion Date,

(b) an event occurring before the Completion Date, which was not itself an Employer's risk, or

(c) the activities of the Contractor on the Site after the Completion Date.

12. Contractor's Risks

12.1 From the Starting Date until the Defects Liability Certificate has been issued, the risks of personal injury, death, and loss of or damage to property (including, without limitation, the Works, Plant, Materials, and Equipment) which are not Employer's risks are Contractor's risks.

13. Insurance

13.1 The Contractor shall provide, in the joint names of the Employer and the Contractor, insurance cover from the Start Date to the end of the Defects Liability Period, in the amounts and deductibles **stated in the PCC** for the following events which are due to the Contractor's risks:

(a) loss of or damage to the Works, Plant, and Materials;

(b) loss of or damage to Equipment;

(c) loss of or damage to property (except the Works, Plant, Materials, and Equipment) in connection with the Contract; and

(d) personal injury or death.

13.2 Policies and certificates for insurance shall be delivered by the Contractor to the Project Manager for the Project Manager's approval before the Start Date. All such insurance shall provide for compensation to be payable in the types and proportions of currencies required to rectify the loss or damage incurred.

13.3 If the Contractor does not provide any of the policies and certificates required, the Employer may effect the insurance which the Contractor should have provided and recover the premiums the Employer has paid from payments otherwise due to the Contractor or, if no payment is due, the payment of the premiums shall be a debt due.

13.4 Alterations to the terms of an insurance shall not be made without the approval of the Project Manager.

13.5 Both parties shall comply with any conditions of the insurance policies.

14. Site Data

14.1 The Contractor shall be deemed to have examined any Site Data **referred to in the PCC**, supplemented by any information available to the Contractor.

15. Contractor to Construct the Works

15.1 The Contractor shall construct and install the Works in accordance with the Specifications and Drawings.

15.2 If the Contract specifies that the Contractor shall design any part of the permanent Works, the Contractor shall take into account the Employer's requirements which may include, if stated in the Specifications:

(a) designing structural elements of the Works taking into account climate change considerations;

(b) applying the concept of universal access (the concept of universal access means unimpeded access for people of all ages and abilities in different situations and under various circumstances; and

(c) considering the incremental risks of the public's potential exposure to operational accidents or natural hazards, including extreme weather events.

16. The Works to Be Completed by the Intended Completion Date

16.1 The Contractor may commence execution of the Works on the Start Date and shall carry out the Works in accordance with the Program submitted by the Contractor, as updated with the approval of the Project Manager, and complete them by the Intended Completion Date.

16.2 The Contractor shall not carry out mobilization to the Site unless the Project Manager gives approval, an approval that shall not be unreasonably delayed, to the measures the Contractor proposes to address environmental and social risks and impacts, which at a minimum shall include applying the Management Strategies and Implementation Plans (MSIPs) and Code of Conduct for Contractor's Personnel submitted as part of the Bid and agreed as part of the Contract.

The Contractor shall submit, to the Project Manager for its approval any additional MSIPs as are necessary to manage the ES risks and impacts of ongoing Works. These MSIPs collectively comprise the Contractor's Environmental and Social Management Plan (C-ESMP). The Contractor shall review the C-ESMP, periodically (but not less than every six (6) months), and update it as required to ensure that it contains measures appropriate to the Works. The updated C-ESMP shall be submitted to the Project Manager for its approval.

17. Approval by the Project Manager

17.1 The Contractor shall submit Specifications and Drawings showing the proposed Temporary Works to the Project Manager, for his approval.

17.2 The Contractor shall be responsible for design of Temporary Works.

17.3 The Project Manager's approval shall not alter the Contractor's responsibility for design of the Temporary Works.

17.4 The Contractor shall obtain approval of third parties to the design of the Temporary Works, where required.

17.5 All Drawings prepared by the Contractor for the execution of the temporary or permanent Works, are subject to prior approval by the Project Manager before this use.

18. Health, Safety and Protection of the Environment

18.1 The Contractor shall be responsible for the safety of all activities on the Site.

18.2 The Contractor shall:

(a) comply with all applicable health and safety regulations and Laws;

(b) comply with all applicable health and safety obligations specified in the Contract;

(c) take care for the health and safety of all persons entitled to be on the Site and other places, if any, where the Works are being executed;

(d) keep the Site and Works clear of unnecessary obstruction so as to avoid danger to these persons;

(e) provide fencing, lighting, safe access, guarding and watching of the Works until the issue of the Contract Completion Certificate;

(f) provide any Temporary Works (including roadways, footways, guards and fences) which may be necessary, because of the execution of the Works, for the use and protection of the public and of owners and occupiers of adjacent land;

(g) provide health and safety training of Contractor's Personnel as appropriate and maintain training records;

(h) actively engage the Contractor's Personnel in promoting understanding, and methods for, implementation of health and safety requirements, as well as in providing information to Contractor's Personnel, training on occupational safety and health, and provision of personal protective equipment without expense to the Contractor's Personnel;

(i) put in place workplace processes for Contractor's Personnel to report work situations that they believe are not safe or healthy, and to remove themselves from a work situation which they have reasonable justification to believe presents an imminent and serious danger to their life or health.

(j) Contractor's Personnel who remove themselves from such work situations shall not be required to return to work until necessary remedial action to correct the situation has been taken. Contractor's Personnel shall not be retaliated

against or otherwise subject to reprisal or negative action for such reporting or removal;

(k) where the Employer's Personnel, any other contractors employed by the Employer, and/or personnel of any legally constituted public authorities and private utility companies are employed in carrying out, on or near the site, of any work not included in the Contract, collaborate in applying the health and safety requirements, without prejudice to the responsibility of the relevant entities for the health and safety of their own personnel; and

(l) establish and implement a system for regular (not less than six-monthly) review of health and safety performance and the working environment.

Subject to GCC Sub-Clause 16.2, the Contractor shall submit to the Project Manager for its approval a health and safety manual which has been specifically prepared for the Works, the Site and other places (if any) where the Contractor intends to execute the Works.

The health and safety manual shall be in addition to any other similar document required under applicable health and safety regulations and laws.

The health and safety manual shall set out all the health and safety requirements under the Contract,

(a) which shall include at a minimum:

(i) the procedures to establish and maintain a safe working environment without risk to health at all workplaces, machinery, equipment and processes under the control of the Contractor, including control measures for chemical, physical and biological substances and agents;

(ii) details of the training to be provided, records to be kept;

(iii) the procedures for prevention, preparedness and response activities to be implemented in the case of an emergency event (i.e. an unanticipated incident, arising from both natural and man-made hazards, typically in the form of fire, explosions, leaks or spills, which may occur for a variety of different reasons including failure to implement operating procedures that are designed to prevent their occurrence, extreme weather or lack of early warning);

(iv) remedies for adverse impacts such as occupational injuries, deaths, disability and disease;

(v) the measures to be taken to avoid or minimize the potential for community exposure to water-borne, water-based, water-related, and vector-borne diseases,

(vi) the measures to be implemented to avoid or minimize the spread of communicable diseases (including transfer of Sexually Transmitted Diseases or Infections (STDs), such as HIV virus) and non-communicable diseases associated with the execution of the Works, taking into consideration differentiated exposure to and higher sensitivity of vulnerable groups. This includes taking measures to avoid or minimize the transmission of communicable diseases that may be associated with the influx of temporary or permanent Contract-related labor;

(vii) the policies and procedures on the management and quality of accommodation and welfare facilities if such accommodation and welfare facilities are provided by the Contractor in accordance with GCC Sub-Clause 9.4.6; and

(b) any other requirements stated in the Specification

18.3 Protection of the environment

The Contractor shall take all necessary measures to:

(a) protect the environment (both on and off the Site); and

(b) limit damage and nuisance to people and property resulting from pollution, noise and other results of the Contractor's operations and/ or activities.

The Contractor shall ensure that emissions, surface discharges, effluent and any other pollutants from the Contractor's activities shall exceed neither the values indicated in the Specifications, nor those prescribed by applicable laws.

In the event of damage to the environment, property and/or nuisance to people, on or off Site as a result of the Contractor's operations, the Contractor shall agree with the Project Manager the appropriate actions and time scale to remedy, as practicable, the damaged environment to its former condition. The Contractor shall implement such remedies at its cost to the satisfaction of the Project Manager.

19. Archaeological and Geological Findings

19.1 All fossils, coins, articles of value or antiquity, structures, groups of structures, and other remains or items of geological, archaeological, paleontological, historical, architectural or religious interest found on the Site shall be placed under the care and custody of the Employer. The Contractor shall:

(a) take all reasonable precautions, including fencing-off the area or site of the finding, to avoid further disturbance and prevent Contractor's Personnel or other persons from removing or damaging any of these findings;

(b) train relevant Contractor's Personnel on appropriate actions to be taken in the event of such findings; and

(c) implement any other action consistent with the requirements of the Specifications and relevant laws.

The Contractor shall, as soon as practicable after discovery of any such finding, notify the Project Manager of such discoveries and carry out the Project Manager's instructions for dealing with them.

20. Possession of the Site

20.1 The Employer shall give possession of all parts of the Site to the Contractor. If possession of a part is not given by the date **stated in the PCC,** the Employer shall be deemed to have delayed the start of the relevant activities, and this shall be a Compensation Event.

21. Access to the Site

21.1 The Contractor shall allow the Project Manager and any person authorized by the Project Manager (including the Bank staff or consultants acting on the Bank's behalf, stakeholders and third parties, such as independent experts, local communities, or non-governmental organizations), including to carry out environmental and social audit, as appropriate, access to the Site and to any place where work in connection with the Contract is being carried out or is intended to be carried out.

22. Instructions, Inspections and Audits

22.1 The Contractor shall carry out all instructions of the Project Manager which comply with the applicable laws where the Site is located.

22.2 The Contractor shall keep, and shall make all reasonable efforts to cause its Subcontractors and subconsultants to keep, accurate and systematic accounts and records in respect of the Works in such form and details as will clearly identify relevant time changes and costs.

22.3 Inspections &Audit by the Bank

Pursuant to paragraph 2.2 e. of Appendix A to the GCC- Fraud and Corruption, the Contractor shall permit and shall cause its

agents (where declared or not), subcontractors, subconsultants, service providers, suppliers, and personnel, to permit, the Bank and/or persons appointed by the Bank to inspect the site and/or the accounts, records and other documents relating to the procurement process, selection and/or contract execution, and to have such accounts, records and other documents audited by auditors appointed by the Bank. The Contractor's and its Subcontractors' and subconsultants' attention is drawn to GCC Sub-Clause 25.1 (Fraud and Corruption) which provides, inter alia, that acts intended to materially impede the exercise of the Bank's inspection and audit rights constitute a prohibited practice subject to contract termination (as well as to a determination of ineligibility pursuant to the Bank's prevailing sanctions procedures).

23. Appointment of the Adjudicator

23.1 The Adjudicator shall be appointed jointly by the Employer and the Contractor, at the time of the Employer's issuance of the Letter of Acceptance. If, in the Letter of Acceptance, the Employer does not agree on the appointment of the Adjudicator, the Employer will request the Appointing Authority **designated in the PCC**, to appoint the Adjudicator within 14 days of receipt of such request.

23.2 Should the Adjudicator resign or die, or should the Employer and the Contractor agree that the Adjudicator is not functioning in accordance with the provisions of the Contract, a new Adjudicator shall be jointly appointed by the Employer and the Contractor. In case of disagreement between the Employer and the Contractor, within 30 days, the Adjudicator shall be designated by the Appointing Authority **designated in the PCC** at the request of either party, within 14 days of receipt of such request.

24. Procedure for Disputes

24.1 If the Contractor believes that a decision taken by the Project Manager was either outside the authority given to the Project Manager by the Contract or that the decision was wrongly taken, the decision shall be referred to the Adjudicator within 14 days of the notification of the Project Manager's decision.

24.2 The Adjudicator shall give a decision in writing within 28 days of receipt of a notification of a dispute.

24.3 The Adjudicator shall be paid by the hour at the **rate specified in the PCC,** together with reimbursable expenses of the types **specified in the PCC**, and the cost shall be divided equally between the Employer and the Contractor, whatever decision is reached by the Adjudicator. Either party may refer a decision of the Adjudicator to an Arbitrator within 28 days of the Adjudicator's written decision. If neither party refers the dispute

to arbitration within the above 28 days, the Adjudicator's decision shall be final and binding.

24.4 The arbitration shall be conducted in accordance with the arbitration procedures published by the institution named and in the place **specified in the PCC.**

25. Fraud and Corruption

25.1 The Bank requires compliance with the Bank's Anti-Corruption Guidelines and its prevailing sanctions policies and procedures as set forth in the WBG's Sanctions Framework, as set forth in Appendix A to the GCC.

25.2 The Employer requires the Contractor to disclose any commissions or fees that may have been paid or are to be paid to agents or any other party with respect to the bidding process or execution of the Contract. The information disclosed must include at least the name and address of the agent or other party, the amount and currency, and the purpose of the commission, gratuity or fee.

26. Stakeholder Engagement

26.1 The Contractor shall provide relevant contract- related information, as the Employer and/or Project Manager may reasonably request to conduct Stakeholder engagements. "Stakeholder" refers to individuals or groups who:

(i) are affected or likely to be affected by the Contract; and

(ii) may have an interest in the Contract.

The Contractor may also directly participate in Stakeholder engagements, as the Employer and/or Project Manager may reasonably request

27. Suppliers (other than Subcontractors)

27.1 Forced Labor: The Contractor shall take measures to require its suppliers (other than Subcontractors) not to employ or engage forced labor including trafficked persons as described in GCC Sub-Clause 9.4.14. If forced labor/trafficking cases are identified, the Contractor shall take measures to require the suppliers to take appropriate steps to remedy them. Where the supplier does not remedy the situation, the Contractor shall within a reasonable period substitute the supplier with a supplier that is able to manage such risks.

27.2 *Child Labor:* The Contractor shall take measures to require its suppliers (other than Subcontractors) not to employ or engage child labor as described in GCC Sub-Clause 9.4.15. If child labor cases are identified, the Contractor shall take measures to require the suppliers to take appropriate steps to remedy them. Where the supplier does not remedy the situation, the Contractor shall within a reasonable period substitute the supplier with a supplier that is able to manage such risks.

27.3 *Serious Safety Issues:* The Contractor, including its Subcontractors, shall comply with all applicable safety obligations, including as stated in GCC Sub-Clause 18.2. The Contractor shall also take measures to require its suppliers (other than Subcontractors) to adopt procedures and mitigation measures adequate to address safety issues related to their personnel. If serious safety issues are identified, the Contractor shall take measures to require the suppliers to take appropriate steps to remedy them. Where the supplier does not remedy the situation, the Contractor shall within a reasonable period substitute the supplier with a supplier that is able to manage such risks.

27.4 *Obtaining natural resource materials in relation to supplier:* The Contractor shall obtain natural resource *materials* from suppliers that can demonstrate, through compliance with the applicable verification and/ or certification requirements, that obtaining such materials is not contributing to the risk of significant conversion or significant degradation of natural or critical habitats such as unsustainably harvested wood products, gravel or sand extraction from river beds or beaches.

If a supplier cannot continue to demonstrate that obtaining such materials is not contributing to the risk of significant conversion or significant degradation of natural or critical habitats, the Contractor shall within a reasonable period substitute the supplier with a supplier that is able to demonstrate that they are not significantly adversely impacting the habitats.

28. Code of Conduct

28.1 The Contractor shall have a Code of Conduct for the Contractor's Personnel.

The Contractor shall take all necessary measures to ensure that each Contractor's Personnel is made aware of the Code of Conduct including specific behaviors that are prohibited, and understands the consequences of engaging in such prohibited behaviors.

These measures include providing instructions and documentation that can be understood by the Contractor's Personnel and seeking to obtain that person's signature acknowledging receipt of such instructions and/or documentation, as appropriate.

The Contractor shall also ensure that the Code of Conduct is visibly displayed in multiple locations on the Site and any other place where the Works will be carried out, as well as in areas outside the Site accessible to the local community and project affected people. The posted Code of Conduct shall be provided in languages comprehensible to Contractor's Personnel, Employer's Personnel and the local community.

The Contractor's Management Strategy and Implementation Plans shall include appropriate processes for the Contractor to verify compliance with these obligations.

29. Security of the Site

29.1 The Contractor shall be responsible for the security of the Site, and:

(a) for keeping unauthorized persons off the Site;

(b) authorized persons shall be limited to the Contractor's Personnel, the Employer's Personnel, and to any other personnel identified as authorized personnel (including the Employer's other contractors on the Site), by a notice from the Employer or the Project Manager to the Contractor.

Subject to GCC Sub-Clause 16.2, the Contractor shall submit for the Project Manager's No-objection a security management plan that sets out the security arrangements for the Site

The Contractor shall (i) conduct appropriate background checks on any personnel retained to provide security; (ii) train the security personnel adequately (or determine that they are properly trained) in the use of force (and where applicable, firearms), and appropriate conduct towards Contractor's Personnel, Employer's Personnel and affected communities; and (iii) require the security personnel to act within the applicable Laws and any requirements set out in the Specifications.

The Contractor shall not permit any use of force by security personnel in providing security except when used for preventive and defensive purposes in proportion to the nature and extent of the threat.

In making security arrangements, the Contractor shall also comply with any additional requirements stated in the Specification."

B. Time Control

30. Program and Progress Reports

30.1 Within the time **stated in the PCC**, after the date of the Letter of Acceptance, the Contractor shall submit to the Project Manager for approval a Program showing the general methods, arrangements, order, and timing for all the activities in the Works. In the case of a lump-sum contract, the activities in the Program shall be consistent with those in the Activity Schedule. The Project Manager's approval of the Program shall not alter the Contractor's obligations. The Contractor may revise the Program and submit it to the Project Manager again at any time. A revised Program shall show the effect of Variations and Compensation Events.

30.2 An update of the Program shall be a program showing the actual progress achieved on each activity and the effect of the progress achieved on the timing of the remaining work, including any changes to the sequence of the activities.

30.3 The Contractor shall monitor progress of the Works and submit to the Project manager progress report and any updated Program showing the actual progress achieved and the effect of the progress achieved on the timing of the remaining Works, including any changes to the sequence of the activities, at intervals no longer than the period **stated in the PCC.** If the Contractor does not submit an updated Program within this period, the Project Manager may withhold the amount **stated in the PCC** from the next payment certificate and continue to withhold this amount until the next payment after the date on which the overdue Program has been submitted. In the case of lump-sum Contract, the Contractor shall provide an updated Activity Schedule within 14 days of being instructed to by the Project Manager.

30.4 Unless otherwise stated in the Specifications, each progress report shall include the Environmental and Social (ES) metrics set out in Appendix B.

30.5 In addition to the progress reports, the Contractor shall inform the Project Manager immediately of any allegation, incident or accident in the Site, which has or is likely to have a significant adverse effect on the environment, the affected communities, the public, Employer's Personnel, Project Manager's personnel or Contractor's Personnel. This includes, but is not limited to, any incident or accident causing fatality or serious injury; significant adverse effects or damage to private property; or any allegation of SEA and/or SH. In case of SEA and/or SH, while maintaining confidentiality as appropriate, the type of allegation (sexual exploitation, sexual abuse or sexual harassment), gender and age of the person who experienced the alleged incident should be included in the information.

The Contractor, upon becoming aware of the allegation, incident or accident, shall also immediately inform the Project Manager of any such incident or accident on the Subcontractors' or suppliers' premises relating to the Works which has or is likely to have a significant adverse effect on the environment, the affected communities, the public, Employer's Personnel, or Contractor's, its Subcontractors' and suppliers' personnel. The notification shall provide sufficient detail regarding such incidents or accidents. The Contractor shall provide full details of such incidents or accidents to the Project Manager within the timeframe agreed with the Project Manager.

The Contractor shall require its Subcontractors and suppliers (other than Subcontractors) to immediately notify the Contractor of any incidents or accidents referred to in this Subclause.

31. Extension of the Intended Completion Date

31.1 The Project Manager shall extend the Intended Completion Date if a Compensation Event occurs or a Variation is issued which makes it impossible for Completion to be achieved by the Intended Completion Date without the Contractor taking steps to accelerate the remaining work, which would cause the Contractor to incur additional cost.

31.2 The Project Manager shall decide whether and by how much to extend the Intended Completion Date within 21 days of the Contractor asking the Project Manager for a decision upon the effect of a Compensation Event or Variation and submitting full supporting information. If the Contractor has failed to give early warning of a delay or has failed to cooperate in dealing with a delay, the delay by this failure shall not be considered in assessing the new Intended Completion Date.

32. Acceleration

32.1 When the Employer wants the Contractor to finish before the Intended Completion Date, the Project Manager shall obtain priced proposals for achieving the necessary acceleration from the Contractor. If the Employer accepts these proposals, the Intended Completion Date shall be adjusted accordingly and confirmed by both the Employer and the Contractor.

32.2 If the Contractor's priced proposals for an acceleration are accepted by the Employer, they are incorporated in the Contract Price and treated as a Variation.

33. Delays Ordered by the Project Manager

33.1 The Project Manager may instruct the Contractor to delay the start or progress of any activity within the Works.

34. Management Meetings

34.1 Either the Project Manager or the Contractor may require the other to attend a management meeting. The business of a management meeting shall be to review the plans for remaining work and to deal with matters raised in accordance with the early warning procedure.

34.2 The Project Manager shall record the business of management meetings and provide copies of the record to those attending the meeting and to the Employer. The responsibility of the parties for actions to be taken shall be decided by the Project Manager either at the management meeting or after the management meeting and stated in writing to all who attended the meeting.

35. Early Warning

35.1 The Contractor shall warn the Project Manager at the earliest opportunity of specific likely future events or circumstances that

may adversely affect the quality of the work, increase the Contract Price, or delay the execution of the Works. The Project Manager may require the Contractor to provide an estimate of the expected effect of the future event or circumstance on the Contract Price and Completion Date. The estimate shall be provided by the Contractor as soon as reasonably possible.

35.2 The Contractor shall cooperate with the Project Manager in making and considering proposals for how the effect of such an event or circumstance can be avoided or reduced by anyone involved in the work and in carrying out any resulting instruction of the Project Manager.

C. Quality Control

36. Identifying Defects

36.1 The Project Manager shall check the Contractor's work and notify the Contractor of any Defects that are found. Such checking shall not affect the Contractor's responsibilities. The Project Manager may instruct the Contractor to search for a Defect and to uncover and test any work that the Project Manager considers may have a Defect.

37. Tests

37.1 If the Project Manager instructs the Contractor to carry out a test not specified in the Specifications to check whether any work has a Defect and the test shows that it does, the Contractor shall pay for the test and any samples. If there is no Defect, the test shall be a Compensation Event.

38. Correction of Defects

38.1 The Project Manager shall give notice to the Contractor of any Defects before the end of the Defects Liability Period, which begins at Completion, and is **defined in the PCC.** The Defects Liability Period shall be extended for as long as Defects remain to be corrected.

38.2 Every time notice of a Defect is given, the Contractor shall correct the notified Defect within the length of time specified by the Project Manager's notice.

39. Uncorrected Defects

39.1 If the Contractor has not corrected a Defect within the time specified in the Project Manager's notice, the Project Manager shall assess the cost of having the Defect corrected, and the Contractor shall pay this amount.

D. Cost Control

40. Contract Price18

40.1 The Bill of Quantities shall contain priced items for the Works to be performed by the Contractor. The Bill of Quantities is used

[18] In lump-sum contracts, replace GCC Sub-Clauses 40.1 as follows:

to calculate the Contract Price. The Contractor will be paid for the quantity of the work accomplished at the rate in the Bill of Quantities for each item.

41. Changes in the Contract Price19

41.1 If the final quantity of the work done differs from the quantity in the Bill of Quantities for the particular item by more than 25 percent, provided the change exceeds 1 percent of the Initial Contract Price, the Project Manager shall adjust the rate to allow for the change. The Project Manager shall not adjust rates from changes in quantities if thereby the Initial Contract Price is exceeded by more than 15 percent, except with the prior approval of the Employer.

41.2 If requested by the Project Manager, the Contractor shall provide the Project Manager with a detailed cost breakdown of any rate in the Bill of Quantities.

42. Variations

42.1 All Variations shall be included in updated Programs[20] produced by the Contractor.

42.2 The Contractor shall provide the Project Manager with a quotation for carrying out the Variation when requested to do so by the Project Manager. The Contractor shall also provide information of any ES risks and impacts of the Variation. The Project Manager shall assess the quotation, which shall be given within seven (7) days of the request or within any longer period stated by the Project Manager and before the Variation is ordered.

42.3 If the Contractor's quotation is unreasonable, the Project Manager may order the Variation and make a change to the Contract Price, which shall be based on the Project Manager's own forecast of the effects of the Variation on the Contractor's costs.

42.4 If the Project Manager decides that the urgency of varying the work would prevent a quotation being given and considered without delaying the work, no quotation shall be given and the Variation shall be treated as a Compensation Event.

40.1 The Contractor shall provide updated Activity Schedules within 14 days of being instructed to by the Project Manager. The Activity Schedule shall contain the priced activities for the Works to be performed by the Contractor. The Activity Schedule is used to monitor and control the performance of activities on which basis the Contractor will be paid. If payment for materials on site shall be made separately, the Contractor shall show delivery of Materials to the Site separately on the Activity Schedule.

19 In lump-sum contracts, replace entire GCC Clause 41 with new GCC Sub-Clause 41.1, as follows:

41.1 The Activity Schedule shall be amended by the Contractor to accommodate changes of Program or method of working made at the Contractor's own discretion. Prices in the Activity Schedule shall not be altered when the Contractor makes such changes to the Activity Schedule.

20 In lump-sum contracts, add "and Activity Schedules" after "Programs."

42.5 The Contractor shall not be entitled to additional payment for costs that could have been avoided by giving early warning.

42.6 If the work in the Variation corresponds to an item description in the Bill of Quantities and if, in the opinion of the Project Manager, the quantity of work above the limit stated in GCC Sub-Clause 41.1 or the timing of its execution do not cause the cost per unit of quantity to change, the rate in the Bill of Quantities shall be used to calculate the value of the Variation. If the cost per unit of quantity changes, or if the nature or timing of the work in the Variation does not correspond with items in the Bill of Quantities, the quotation by the Contractor shall be in the form of new rates for the relevant items of work. [21]

42.7 Value Engineering: The Contractor may prepare, at its own cost, a value engineering proposal at any time during the performance of the contract. The value engineering proposal shall, at a minimum, include the following;

(a) the proposed change(s), and a description of the difference to the existing contract requirements;

(b) a full cost/benefit analysis of the proposed change(s) including a description and estimate of costs (including life cycle cost) the Employer may incur in implementing the value engineering proposal;

(c) a description of any effect(s) of the change on performance/functionality; and

(d) a description of the proposed work to be performed, a program for its execution and sufficient ES information to enable an evaluation of ES risks and impacts.

The Employer may accept the value engineering proposal if the proposal demonstrates benefits that:

(a) accelerates the contract completion period; or

(b) reduces the Contract Price or the life cycle costs to the Employer; or

(c) improves the quality, efficiency, safety or sustainability of the Facilities; or

(d) yields any other benefits to the Employer,

without compromising the functionality of the Works.

If the value engineering proposal is approved by the Employer and results in:

[21] In lump-sum contracts, delete this paragraph.

(a) a reduction of the Contract Price; the amount to be paid to the Contractor shall be the **percentage specified in the PCC** of the reduction in the Contract Price; or

(b) an increase in the Contract Price; but results in a reduction in life cycle costs due to any benefit described in (a) to (d) above, the amount to be paid to the Contractor shall be the full increase in the Contract Price.

43. Cash Flow Forecasts

43.1 When the Program,[22] is updated, the Contractor shall provide the Project Manager with an updated cash flow forecast. The cash flow forecast shall include different currencies, as defined in the Contract, converted as necessary using the Contract exchange rates.

44. Payment Certificates

44.1 The Contractor shall submit to the Project Manager monthly statements of the estimated value of the work executed less the cumulative amount certified previously.

44.2 The Project Manager shall check the Contractor's monthly statement and certify the amount to be paid to the Contractor.

44.3 The value of work executed shall be determined by the Project Manager.

44.4 The value of work executed shall comprise the value of the quantities of work in the Bill of Quantities that have been completed.[23]

44.5 The value of work executed shall include the valuation of Variations and Compensation Events.

44.6 The Project Manager may exclude any item certified in a previous certificate or reduce the proportion of any item previously certified in any certificate in the light of later information.

44.7 If the Contractor was, or is, failing to perform any ES obligations or work under the Contract, the value of this work or obligation, as determined by the Project Manager, may be withheld until the work or obligation has been performed, and/or the cost of rectification or replacement, as determined by the Project Manager, may be withheld until rectification or replacement has been completed. Failure to perform includes, but is not limited to the following:

(a) failure to comply with any ES obligations or work described in the Works' Requirements which may include: working outside site boundaries, excessive dust,

---

22 In lump-sum contracts, add "or Activity Schedule" after "Program."

23 In lump-sum contracts, replace this paragraph with the following: "The value of work executed shall comprise the value of completed activities in the Activity Schedule."

failure to keep public roads in a safe usable condition, damage to offsite vegetation, pollution of water courses from oils or sedimentation, contamination of land e.g. from oils, human waste, damage to archeology or cultural heritage features, air pollution as a result of unauthorized and/or inefficient combustion;

(b) failure to regularly review C-ESMP and/or update it in a timely manner to address emerging ES issues, or anticipated risks or impacts;

(c) failure to implement the C-ESMP e.g. failure to provide required training or sensitization;

(d) failing to have appropriate consents/permits prior to undertaking Works or related activities;

(e) failure to submit ES report/s (as described in Appendix B), or failure to submit such reports in a timely manner;

(f) failure to implement remediation as instructed by the Project Manager within the specified timeframe (e.g. remediation addressing non-compliance/s).

45. Payments

45.1 Payments shall be adjusted for deductions for advance payments and retention. The Employer shall pay the Contractor the amounts certified by the Project Manager within 28 days of the date of each certificate. If the Employer makes a late payment, the Contractor shall be paid interest on the late payment in the next payment. Interest shall be calculated from the date by which the payment should have been made up to the date when the late payment is made at the prevailing rate of interest for commercial borrowing for each of the currencies in which payments are made.

45.2 If an amount certified is increased in a later certificate or as a result of an award by the Adjudicator or an Arbitrator, the Contractor shall be paid interest upon the delayed payment as set out in this clause. Interest shall be calculated from the date upon which the increased amount would have been certified in the absence of dispute.

45.3 Unless otherwise stated, all payments and deductions shall be paid or charged in the proportions of currencies comprising the Contract Price.

45.4 Items of the Works for which no rate or price has been entered in shall not be paid for by the Employer and shall be deemed covered by other rates and prices in the Contract.

46. Compensation Events

46.1 The following shall be Compensation Events:

(a) The Employer does not give access to a part of the Site by the Site Possession Date pursuant to GCC Sub-Clause 20.1.

(b) The Employer modifies the Schedule of Other Contractors in a way that affects the work of the Contractor under the Contract.

(c) The Project Manager orders a delay or does not issue Drawings, Specifications, or instructions required for execution of the Works on time.

(d) The Project Manager instructs the Contractor to uncover or to carry out additional tests upon work, which is then found to have no Defects.

(e) The Project Manager unreasonably does not approve a subcontract to be let.

(f) Ground conditions are substantially more adverse than could reasonably have been assumed before issuance of the Letter of Acceptance from the information issued to bidders (including the Site Investigation Reports), from information available publicly and from a visual inspection of the Site.

(g) The Project Manager gives an instruction for dealing with an unforeseen condition, caused by the Employer, or additional work required for safety or other reasons.

(h) Other contractors, public authorities, utilities, or the Employer does not work within the dates and other constraints stated in the Contract, and they cause delay or extra cost to the Contractor.

(i) The advance payment is delayed.

(j) The effects on the Contractor of any of the Employer's Risks.

(k) The Project Manager unreasonably delays issuing a Certificate of Completion.

46.2 If a Compensation Event would cause additional cost or would prevent the work being completed before the Intended Completion Date, the Contract Price shall be increased and/or the Intended Completion Date shall be extended. The Project Manager shall decide whether and by how much the Contract Price shall be increased and whether and by how much the Intended Completion Date shall be extended.

46.3 As soon as information demonstrating the effect of each Compensation Event upon the Contractor's forecast cost has been provided by the Contractor, it shall be assessed by the Project Manager, and the Contract Price shall be adjusted

accordingly. If the Contractor's forecast is deemed unreasonable, the Project Manager shall adjust the Contract Price based on the Project Manager's own forecast. The Project Manager shall assume that the Contractor shall react competently and promptly to the event.

46.4 The Contractor shall not be entitled to compensation to the extent that the Employer's interests are adversely affected by the Contractor's not having given early warning or not having cooperated with the Project Manager.

47. Tax

47.1 The Project Manager shall adjust the Contract Price if taxes, duties, and other levies are changed between the date 28 days before the submission of bids for the Contract and the date of the last Completion certificate. The adjustment shall be the change in the amount of tax payable by the Contractor, provided such changes are not already reflected in the Contract Price or are a result of GCC Clause 49.

48. Currencies

48.1 Where payments are made in currencies other than the currency of the Employer's country **specified in the PCC,** the exchange rates used for calculating the amounts to be paid shall be the exchange rates stated in the Contractor's Bid.

49. Price Adjustment

49.1 Prices shall be adjusted for fluctuations in the cost of inputs only if **provided for in the PCC.** If so provided, the amounts certified in each payment certificate, before deducting for Advance Payment, shall be adjusted by applying the respective price adjustment factor to the payment amounts due in each currency. A separate formula of the type specified below applies to each Contract currency:

$$\mathbf{P_c = A_c + B_c \ Imc/Ioc}$$

where:

P_c is the adjustment factor for the portion of the Contract Price payable in a specific currency "c."

A_c and B_c are coefficients[24] **specified in the PCC,** representing the nonadjustable and adjustable portions, respectively, of the Contract Price payable in that specific currency "c;" and

Imc is the index prevailing at the end of the month being invoiced and Ioc is the index prevailing 28 days before Bid

[24] The sum of the two coefficients A_c and B_c should be 1 (one) in the formula for each currency. Normally, both coefficients shall be the same in the formulae for all currencies, since coefficient A, for the nonadjustable portion of the payments, is a very approximate figure (usually 0.15) to take account of fixed cost elements or other nonadjustable components. The sum of the adjustments for each currency are added to the Contract Price.

opening for inputs payable; both in the specific currency "c."

49.2 If the value of the index is changed after it has been used in a calculation, the calculation shall be corrected and an adjustment made in the next payment certificate. The index value shall be deemed to take account of all changes in cost due to fluctuations in costs.

50. Retention

50.1 The Employer shall retain from each payment due to the Contractor the proportion **stated in the PCC** until Completion of the whole of the Works.

50.2 Upon the issue of a Certificate of Completion of the Works by the Project Manager, in accordance with GCC Sub-Clause 57.1, half the total amount retained shall be repaid to the Contractor and half when the Defects Liability Period has passed and the Project Manager has certified that all Defects notified by the Project Manager to the Contractor before the end of this period have been corrected. The Contractor may substitute retention money with an "on demand" Bank guarantee.

51. Liquidated Damages

51.1 The Contractor shall pay liquidated damages to the Employer at the rate per day **stated in the PCC** for each day that the Completion Date is later than the Intended Completion Date. The total amount of liquidated damages shall not exceed the amount **defined in the PCC.** The Employer may deduct liquidated damages from payments due to the Contractor. Payment of liquidated damages shall not affect the Contractor's liabilities.

51.2 If the Intended Completion Date is extended after liquidated damages have been paid, the Project Manager shall correct any overpayment of liquidated damages by the Contractor by adjusting the next payment certificate. The Contractor shall be paid interest on the overpayment, calculated from the date of payment to the date of repayment, at the rates specified in GCC Sub-Clause 45.1.

52. Bonus

52.1 The Contractor shall be paid a Bonus calculated at the rate per calendar day **stated in the PCC** for each day (less any days for which the Contractor is paid for acceleration) that the Completion is earlier than the Intended Completion Date. The Project Manager shall certify that the Works are complete, although they may not be due to be complete.

53. Advance Payment

53.1 The Employer shall make advance payment to the Contractor of the amounts **stated in the PCC** by the date **stated in the PCC,** against provision by the Contractor of an Unconditional Bank Guarantee in a form and by a bank acceptable to the Employer

in amounts and currencies equal to the advance payment. The Guarantee shall remain effective until the advance payment has been repaid, but the amount of the Guarantee shall be progressively reduced by the amounts repaid by the Contractor. Interest shall not be charged on the advance payment.

53.2 The Contractor is to use the advance payment only to pay for Equipment, Plant, Materials, and mobilization expenses required specifically for execution of the Contract. The Contractor shall demonstrate that advance payment has been used in this way by supplying copies of invoices or other documents to the Project Manager.

53.3 The advance payment shall be repaid by deducting proportionate amounts from payments otherwise due to the Contractor, following the schedule of completed percentages of the Works on a payment basis. No account shall be taken of the advance payment or its repayment in assessing valuations of work done, Variations, price adjustments, Compensation Events, Bonuses, or Liquidated Damages.

54. Securities

54.1 The Performance Security shall be provided to the Employer no later than the date specified in the Letter of Acceptance and shall be issued in an amount **specified in the PCC,** by a bank or surety acceptable to the Employer, and denominated in the types and proportions of the currencies in which the Contract Price is payable. The Performance Security shall be valid until a date 28 days from the date of issue of the Certificate of Completion in the case of a Bank Guarantee, and until one year from the date of issue of the Certificate of Completion in the case of a Performance Bond.

55. Dayworks

55.1 If applicable, the Dayworks rates in the Contractor's Bid shall be used only when the Project Manager has given written instructions in advance for additional work to be paid for in that way.

55.2 All work to be paid for as Dayworks shall be recorded by the Contractor on forms approved by the Project Manager. Each completed form shall be verified and signed by the Project Manager within two days of the work being done.

55.3 The Contractor shall be paid for Dayworks subject to obtaining signed Dayworks forms.

56. Cost of Repairs

56.1 Loss or damage to the Works or Materials to be incorporated in the Works between the Start Date and the end of the Defects Correction periods shall be remedied by the Contractor at the Contractor's cost if the loss or damage arises from the Contractor's acts or omissions.

E. Finishing the Contract

57. Completion

57.1 The Contractor shall request the Project Manager to issue a Certificate of Completion of the Works, and the Project Manager shall do so upon deciding that the whole of the Works is completed.

58. Taking Over

58.1 The Employer shall take over the Site and the Works within seven days of the Project Manager's issuing a certificate of Completion.

59. Final Account

59.1 The Contractor shall supply the Project Manager with a detailed account of the total amount that the Contractor considers payable under the Contract before the end of the Defects Liability Period. The Project Manager shall issue a Defects Liability Certificate and certify any final payment that is due to the Contractor within 56 days of receiving the Contractor's account if it is correct and complete. If it is not, the Project Manager shall issue within 56 days a schedule that states the scope of the corrections or additions that are necessary. If the Final Account is still unsatisfactory after it has been resubmitted, the Project Manager shall decide on the amount payable to the Contractor and issue a payment certificate.

60. Operating and Maintenance Manuals

60.1 If "as built" Drawings and/or operating and maintenance manuals are required, the Contractor shall supply them by the dates **stated in the PCC.**

60.2 If the Contractor does not supply the Drawings and/or manuals by the dates **stated in the PCC** pursuant to GCC Sub-Clause 60.1**,** or they do not receive the Project Manager's approval, the Project Manager shall withhold the amount **stated in the PCC** from payments due to the Contractor.

61. Termination

61.1 The Employer or the Contractor may terminate the Contract if the other party causes a fundamental breach of the Contract.

61.2 Fundamental breaches of Contract shall include, but shall not be limited to, the following:

(a) the Contractor stops work for 28 days when no stoppage of work is shown on the current Program and the stoppage has not been authorized by the Project Manager;

(b) the Project Manager instructs the Contractor to delay the progress of the Works, and the instruction is not withdrawn within 28 days;

(c) the Employer or the Contractor is made bankrupt or goes into liquidation other than for a reconstruction or amalgamation;

(d) a payment certified by the Project Manager is not paid by the Employer to the Contractor within 84 days of the date of the Project Manager's certificate;

(e) the Project Manager gives Notice that failure to correct a particular Defect is a fundamental breach of Contract and the Contractor fails to correct it within a reasonable period of time determined by the Project Manager;

(f) the Contractor does not maintain a Security, which is required;

(g) the Contractor has delayed the completion of the Works by the number of days for which the maximum amount of liquidated damages can be paid, as **defined in the PCC**; or

(h) if the Contractor, in the judgment of the Employer has engaged in Fraud and Corruption, as defined in paragraph 2.2 a of the Appendix A to the GCC, in competing for or in executing the Contract, then the Employer may, after giving fourteen (14) days written notice to the Contractor, terminate the Contract and expel him from the Site.

61.3 Notwithstanding the above, the Employer may terminate the Contract for convenience.

61.4 If the Contract is terminated, the Contractor shall stop work immediately, make the Site safe and secure, and leave the Site as soon as reasonably possible.

61.5 When either party to the Contract gives notice of a breach of Contract to the Project Manager for a cause other than those listed under GCC Sub-Clause 61.2 above, the Project Manager shall decide whether the breach is fundamental or not.

62. Payment upon Termination

62.1 If the Contract is terminated because of a fundamental breach of Contract by the Contractor, the Project Manager shall issue a certificate for the value of the work done and Materials ordered less advance payments received up to the date of the issue of the certificate and less the percentage to apply to the value of the work not completed, as **specified in the PCC.** Additional Liquidated Damages shall not apply. If the total amount due to the Employer exceeds any payment due to the Contractor, the difference shall be a debt payable to the Employer.

62.2 If the Contract is terminated for the Employer's convenience or because of a fundamental breach of Contract by the Employer, the Project Manager shall issue a certificate for the value of the work done, Materials ordered, the reasonable cost of removal of Equipment, repatriation of the Contractor's personnel employed solely on the Works, and the Contractor's costs of protecting and securing the Works, and less advance payments received up to the date of the certificate.

63. Property

63.1 All Materials on the Site, Plant, Equipment, Temporary Works, and Works shall be deemed to be the property of the Employer if the Contract is terminated because of the Contractor's default.

64. Release from Performance

64.1 If the Contract is frustrated by the outbreak of war or by any other event entirely outside the control of either the Employer or the Contractor, the Project Manager shall certify that the Contract has been frustrated. The Contractor shall make the Site safe and stop work as quickly as possible after receiving this certificate and shall be paid for all work carried out before receiving it and for any work carried out afterwards to which a commitment was made.

65. Suspension of Bank Loan or Credit

65.1 In the event that the Bank suspends the Loan or Credit to the Employer, from which part of the payments to the Contractor are being made:

(a) The Employer is obligated to notify the Contractor of such suspension within 7 days of having received the Bank's suspension notice.

(b) If the Contractor has not received sums due to it within the 28 days for payment provided for in GCC Sub-Clause 45.1, the Contractor may immediately issue a 14-day termination notice.

APPENDIX A
TO GENERAL CONDITIONS

Fraud and Corruption
(Text in this Appendix shall not be modified)

1. Purpose

1.1 The Bank's Anti-Corruption Guidelines and this annex apply with respect to procurement under Bank Investment Project Financing operations.

2. Requirements

2.1 The Bank requires that Borrowers (including beneficiaries of Bank financing); bidders (applicants/proposers), consultants, contractors and suppliers; any sub-contractors, sub-consultants, service providers or suppliers; any agents (whether declared or not); and any of their personnel, observe the highest standard of ethics during the procurement process, selection and contract execution of Bank-financed contracts, and refrain from Fraud and Corruption.

2.2 To this end, the Bank:

a. Defines, for the purposes of this provision, the terms set forth below as follows:

i. "corrupt practice" is the offering, giving, receiving, or soliciting, directly or indirectly, of anything of value to influence improperly the actions of another party;

ii. "fraudulent practice" is any act or omission, including misrepresentation, that knowingly or recklessly misleads, or attempts to mislead, a party to obtain financial or other benefit or to avoid an obligation;

iii. "collusive practice" is an arrangement between two or more parties designed to achieve an improper purpose, including to influence improperly the actions of another party;

iv. "coercive practice" is impairing or harming, or threatening to impair or harm, directly or indirectly, any party or the property of the party to influence improperly the actions of a party;

v. "obstructive practice" is:

(a) deliberately destroying, falsifying, altering, or concealing of evidence material to the investigation or making false statements to investigators in order to materially impede a Bank investigation into allegations of a corrupt, fraudulent, coercive, or collusive practice; and/or threatening, harassing, or intimidating any party to prevent it from disclosing its knowledge of matters relevant to the investigation or from pursuing the investigation; or

(b) acts intended to materially impede the exercise of the Bank's inspection and audit rights provided for under paragraph 2.2 e. below.

b. Rejects a proposal for award if the Bank determines that the firm or individual recommended for award, any of its personnel, or its agents, or its sub-consultants, sub-contractors, service providers, suppliers and/ or their employees, has, directly or indirectly, engaged in corrupt, fraudulent, collusive, coercive, or obstructive practices in competing for the contract in question;

c. In addition to the legal remedies set out in the relevant Legal Agreement, may take other appropriate actions, including declaring misprocurement, if the Bank determines at any time that representatives of the Borrower or of a recipient of any part of the proceeds of the loan engaged in corrupt, fraudulent, collusive, coercive, or obstructive practices during the procurement process, selection and/or execution of the contract in question, without the Borrower having taken timely and appropriate action satisfactory to the Bank to address such practices when they occur, including by failing to inform the Bank in a timely manner at the time they knew of the practices;

d. Pursuant to the Bank's Anti- Corruption Guidelines and in accordance with the Bank's prevailing sanctions policies and procedures, may sanction a firm or individual, either indefinitely or for a stated period of time, including by publicly declaring such firm or individual ineligible (i) to be awarded or otherwise benefit from a Bank-financed contract, financially or in any other manner;[25] (ii) to be a nominated[26] sub-contractor, consultant, manufacturer or supplier, or service provider of an otherwise eligible firm being awarded a Bank-financed contract; and (iii) to receive the proceeds of any loan made by the Bank or otherwise to participate further in the preparation or implementation of any Bank-financed project;

e. Requires that a clause be included in bidding/request for proposals documents and in contracts financed by a Bank loan, requiring (i) bidders(applicants/proposers), consultants, contractors, and suppliers, and their sub-contractors, sub-consultants, service providers, suppliers, agents personnel, permit the Bank to inspect[27] all accounts, records and other documents relating to the procurement process, selection and/or contract execution, and to have them audited by auditors appointed by the Bank.

---

25 For the avoidance of doubt, a sanctioned party's ineligibility to be awarded a contract shall include, without limitation, (i) applying for pre-qualification, expressing interest in a consultancy, and bidding, either directly or as a nominated sub-contractor, nominated consultant, nominated manufacturer or supplier, or nominated service provider, in respect of such contract, and (ii) entering into an addendum or amendment introducing a material modification to any existing contract.

26 A nominated sub-contractor, nominated consultant, nominated manufacturer or supplier, or nominated service provider (different names are used depending on the particular bidding document) is one which has been: (i) included by the bidder in its pre-qualification application or bid because it brings specific and critical experience and know-how that allow the bidder to meet the qualification requirements for the particular bid; or (ii) appointed by the Borrower.

27 Inspections in this context usually are investigative (i.e., forensic) in nature. They involve fact-finding activities undertaken by the Bank or persons appointed by the Bank to address specific matters related to investigations/audits, such as evaluating the veracity of an allegation of possible Fraud and Corruption, through the appropriate mechanisms. Such activity includes but is not limited to: accessing and examining a firm's or individual's financial records and information, and making copies thereof as relevant; accessing and examining any other documents, data and information (whether in hard copy or electronic format) deemed relevant for the investigation/audit, and making copies thereof as relevant; interviewing staff and other relevant individuals; performing physical inspections and site visits; and obtaining third party verification of information.

APPENDIX B

Environmental and Social (ES) Metrics for Progress Reports

[Note to Employer: the following metrics may be amended to reflect the specifics of the Contract. The Employer shall ensure that the metrics provided are appropriate for the Works and impacts/key issues identified in the environmental and social assessment]

Metrics for regular reporting:

a. *environmental incidents or non-compliances with contract requirements, including contamination, pollution or damage to ground or water supplies;*

b. *health and safety incidents, accidents, injuries that require treatment and all fatalities;*

c. *interactions with regulators: identify agency, dates, subjects, outcomes (report the negative if none);*

d. *status of all permits and agreements:*

   i. work permits: number required, number received, actions taken for those not received;

   ii. status of permits and consents:

      - list areas/facilities with permits required (quarries, asphalt & batch plants), dates of application, dates issued (actions to follow up if not issued), dates submitted to resident engineer (or equivalent), status of area (waiting for permits, working, abandoned without reclamation, decommissioning plan being implemented, etc.);
      - list areas with landowner agreements required (borrow and spoil areas, camp sites), dates of agreements, dates submitted to resident engineer (or equivalent);
      - identify major activities undertaken in each area in the reporting period and highlights of environmental and social protection (land clearing, boundary marking, topsoil salvage, traffic management, decommissioning planning, decommissioning implementation);
      - for quarries: status of relocation and compensation (completed, or details of activities and current status in the reporting period).

e. *health and safety supervision:*

   i. safety officer: number days worked, number of full inspections & partial inspections, reports to construction/project management;

ii. number of workers, work hours, metric of PPE use (percentage of workers with full personal protection equipment (PPE), partial, etc.), worker violations observed (by type of violation, PPE or otherwise), warnings given, repeat warnings given, follow-up actions taken (if any);

f. worker accommodations:

i. number of expats housed in accommodations, number of locals;

ii. date of last inspection, and highlights of inspection including status of accommodations' compliance with national and local law and good practice, including sanitation, space, etc.;

iii. actions taken to recommend/require improved conditions, or to improve conditions.

g. Health services: provider of health services, information and/or training, location of clinic, number of non-safety disease or illness treatments and diagnoses (no names to be provided);

h. gender (for expats and locals separately): number of female workers, percentage of workforce, gender issues raised and dealt with (cross-reference grievances or other sections as needed);

i. training:

i. number of new workers, number receiving induction training, dates of induction training;

ii. number and dates of toolbox talks, number of workers receiving Occupational Health and Safety (OHS), environmental and social training;

iii. number and dates of communicable diseases (including STDs) sensitization and/or training, no. workers receiving training (in the reporting period and in the past); same questions for gender sensitization, flag person training.

iv. number and date of SEA and SH prevention sensitization and/or training events, including number of workers receiving training on Code of Conduct for Contractor's Personnel (in the reporting period and in the past), etc.

j. environmental and social supervision:

i. environmentalist: days worked, areas inspected and numbers of inspections of each (road section, work camp, accommodations, quarries, borrow areas, spoil areas, swamps, forest crossings, etc.), highlights of activities/findings (including violations of environmental and/or social best practices, actions taken), reports to environmental and/or social specialist/construction/site management;

ii. sociologist: days worked, number of partial and full site inspections (by area: road section, work camp, accommodations, quarries, borrow areas, spoil areas, clinic, HIV/AIDS center, community centers, etc.), highlights of activities (including violations of environmental and/or social requirements observed, actions taken), reports to environmental and/or social specialist/construction/site management; and

iii. community liaison person(s): days worked (hours community center open), number of people met, highlights of activities (issues raised, etc.), reports to environmental and/or social specialist /construction/site management.

k. *Grievances*: list new grievances (e.g. number of allegations of SEA and SH) received in the reporting period and number of unresolved past grievances by date received, complainant's age and sex, how received, to whom referred to for action, resolution and date (if completed), data resolution reported to complainant, any required follow-up (Cross-reference other sections as needed):

i. Worker grievances;

ii. Community grievances

l. *Traffic, road safety and vehicles/equipment:*

i. traffic and road safety incidents and accidents involving project vehicles & equipment: provide date, location, damage, cause, follow-up;

ii. traffic and road safety incidents and accidents involving non-project vehicles or property (also reported under immediate metrics): provide date, location, damage, cause, follow-up;

iii. overall condition of vehicles/equipment (subjective judgment by environmentalist); non-routine repairs and maintenance needed to improve safety and/or environmental performance (to control smoke, etc.).

m. *Environmental mitigations and issues (what has been done):*

i. dust: number of working bowsers, number of waterings/day, number of complaints, warnings given by environmentalist, actions taken to resolve; highlights of quarry dust control (covers, sprays, operational status); % of rock/ spoil lorries with covers, actions taken for uncovered vehicles;

ii. erosion control: controls implemented by location, status of water crossings, environmentalist inspections and results, actions taken to resolve issues, emergency repairs needed to control erosion/sedimentation;

iii. quarries, borrow areas, spoil areas, asphalt plants, batch plants: identify major activities undertaken in the reporting period at each, and highlights of environmental and social protection: land clearing, boundary marking, topsoil

salvage, traffic management, decommissioning planning, decommissioning implementation;

iv. blasting: number of blasts (and locations), status of implementation of blasting plan (including notices, evacuations, etc.), incidents of off-site damage or complaints (cross-reference other sections as needed);

v. spill clean-ups, if any: material spilled, location, amount, actions taken, material disposal (report all spills that result in water or soil contamination;

vi. waste management: types and quantities generated and managed, including amount taken offsite (and by whom) or reused/recycled/disposed on-site;

vii. details of tree plantings and other mitigations required undertaken in the reporting period;

viii. details of water and swamp protection mitigations required undertaken in the reporting period.

n. compliance:

i. compliance status for conditions of all relevant consents/permits, for the Work, including quarries, etc.): statement of compliance or listing of issues and actions taken (or to be taken) to reach compliance;

ii. compliance status of C-ESMP/ESIP requirements: statement of compliance or listing of issues and actions taken (or to be taken) to reach compliance

iii. compliance status of SEA and SH prevention and response action plan: statement of compliance or listing of issues and actions taken (or to be taken) to reach compliance

iv. compliance status of Health and Safety Management Plan re: statement of compliance or listing of issues and actions taken (or to be taken) to reach compliance

v. other unresolved issues from previous reporting periods related to environmental and social: continued violations, continued failure of equipment, continued lack of vehicle covers, spills not dealt with, continued compensation or blasting issues, etc. Cross-reference other sections as needed.

Section IX - Particular Conditions of Contract

Except where otherwise specified, all Particular Conditions of Contract should be filled in by the Employer prior to issuance of the bidding document. Schedules and reports to be provided by the Employer should be annexed.

<table>
<tr><th colspan="2">A. General</th></tr>
<tr><td>GCC 1.1 (d)</td><td>The financing institution is: The World Bank</td></tr>
<tr><td>GCC 1.1 (r)</td><td>The Employer is: DoA, MoAL, Thimphu Bhutan and the authorized personnel is Mr. Sherub Gyeltshen, Project Manager, PMU</td></tr>
<tr><td>GCC 1.1 (v)</td><td>The Intended Completion Date for the whole of the Works shall be Twelve (12) Months from the date of commencement</td></tr>
<tr><td>GCC 1.1 (y)</td><td>The Project Manager is Mr. Kinzang Wangchuk, NSC Paro</td></tr>
<tr><td>GCC 1.1 (aa)</td><td>The Site is located: NSC – Phobjikha Farm, Wangdue Phodrang, Bhutan</td></tr>
<tr><td>GCC 1.1 (dd)</td><td>The Start Date shall be 10 (Ten) days from the date of signing of Contract Agreement.</td></tr>
<tr><td>GCC 1.1 (hh)</td><td>The Works consist of Construction of SMART Protected Structure for Rapid Multiplication of Potato Tuber Seeds through Root Apical Cutting at Phobjikha, Wangdue Phodrang</td></tr>
<tr><td>GCC 2.2</td><td>Sectional Completions are: None</td></tr>
<tr><td>GCC 2.3(i)</td><td>The following documents also form part of the Contract:
<table>
<tr><th>SN</th><th>Document</th><th>Description of the document</th></tr>
<tr><td>1</td><td>Construction Methodology</td><td>Construction methodology given in bid and/ or amended as per comments of the Employer given in letter of acceptance.</td></tr>
<tr><td>2</td><td>Quality Control</td><td>Quality control procedures and assurance plans given in the bid and/ or amended as per comments of the Employer in letter of acceptance.</td></tr>
<tr><td>3</td><td>Environment and Social Metrics-Appendix B</td><td>Contractor shall comply to the Environment and Social metrics given in the bid and/ or amended as per the comments of the Employer in the letter of acceptance.</td></tr>
</table></td></tr>
</table>

GCC 3.1	The language of the contract is **English** The law that applies to the Contract is the **law of the Kingdom of Bhutan**
GCC 5.1	The Project manager ***may*** delegate any of his duties and responsibilities.
GCC 8.1	Schedule of other contractors: **None**
GCC 13.1	The minimum insurance amounts and deductibles shall be: (a) for loss or damage to the Works, Plant and Materials: ***110% of the Accepted Contract Amount and maximum deductibles as per the insurance policy.*** (b) For loss or damage to Equipment: **100% of the Net Book value and maximum deductibles *as per the insurance policy.*** (c) for loss or damage to property (except the Works, Plant, Materials, and Equipment) in connection with Contract: **Amount and maximum deductibles *as per the insurance policy.*** (d) for personal injury or death: **(i)** of the Contractor's employees: **In accordance with the statutory requirements applicable in Bhutan and amount as permissible under the policy.** (ii) of other people: **In accordance with the statutory requirements applicable in Bhutan and amount as permissible under the policy.**
GCC 14.1	Site Data are: **As per technical requirements and drawings**
GCC 20.1	The Site Possession Date (s) shall be: **Within Ten (10) days from the date of signing of contract Agreement**
GCC 23.1 & GCC 23.2	Appointing Authority for the Adjudicator: **As per the Alternative Dispute Resolution Act 2013 and its Rules and Regulations 2019 (To be discussed with Bhutan Arbitration Resolution Centre)**
GCC 24.3	Hourly rate and types of reimbursable expenses to be paid to the Adjudicator: **is mutually agreed before the commencement of the arbitration proceedings.**
GCC 24.4	Any dispute, controversy, or claim arising out of or relating to this Contract, or breach, termination, or invalidity thereof, shall be settled by arbitration in accordance with the **Alternative Dispute Resolution Act of Bhutan 2013 and its Rules and Regulations 2019 as at present in force.**
B. Time Control	

GCC 30.1	The Contractor shall submit for approval a Program including Environment Management Plan and ESHS-MSIP for the Works (in such for, and detail as the Project Manager shall reasonably prescribe) within 14 (fourteen) days from the date of the Letter of Acceptance.
GCC 30.3	The period between Program updates is **30 (Thirty) days.** The amount to be withheld for late submission of an updated Program is **Not Applicable** The period for submission of progress reports is **14 (Fourteen)** days upon instruction from Project Manager.
C. Quality Control	
GCC 38.1	The Defects Liability Period is: **12 months from the Date of Taking of Site and Work after the completion of work days.**
D. Cost Control	
GCC 42.7	**Not Applicable**
GCC 48.1	The currency of the Employer's Country is: **Bhutanese Ngultrum (BTN)**
GCC 49.1	The Contract ***is not*** subject to price adjustment in accordance with **GCC Clause 45.**
GCC 50.1	The proportion of payments retained is: **10% of the invoiced amount until Completion of the whole of the Works.**
GCC 51.1	The liquidated damages for the whole of the Works are **0.10% of the final Contract Price per day of delay.** The maximum amount of liquidated damages for the whole of the Works is 10% of the final Contract Price.
GCC 52.1	**The Bonus is Not Applicable**
GCC 53.1	The amount of the advance payments is: **20% of the Contract Price** on submission of unconditional Bank Guarantee and after obtaining confirmation from the issuing bank. The above Advance Payments shall be paid to the Contractor no later than 30 days after fulfillment of the above conditions Repayment of advance payment The advance shall be repaid with percentage deductions from the interim payments certified by the Project Manager of the Contract. Deductions shall

	commence in the next Interim Payment Certificate following that in which total of all such payments to the contractor has reached not less than 25% of the Contract Price or twelve months from the date of payment of first installment of advance, whichever period concludes earlier, and shall be made at the rate of 25% of the amounts of all Interim Payment Certificates until such time as the advance has been repaid.
GCC 54.1	An Environmental and Social (ES) Performance Security **shall not** be provided to the Employer.
GCC 54.1	The Performance Security amount is **10 (Ten) %.** (a) Performance Security – unconditional Bank Guarantee: in the amount(s) of 10% of the Accepted Contract Amount and in the same currency(ies) of the Accepted Contract Amount valid until 30 days beyond the date of completion time.
E. Finishing the Contract	
GCC 60.1	The date by which "as-built drawings/documents" consisting of 1 set of hard copies as well as software copy are required is within 30 days of issue of certificate of completion of whole of the Work. **Not Applicable**
GCC 60.2	The amount to be withheld for failing to produce "as built drawings/documents" by the date required in GCC Sub-Clause 60.1 is 1 (One) % of the Final Contract Price. **Not Applicable**
GCC 61.2 (g)	The maximum number of days is: **100 (one hundred)**
GCC 62.1	The percentage to apply to the value of the work not completed, representing the Employer's additional cost for completing the Works, is **20 (Twenty) %.**

Section X - Contract Forms

Table of Forms

Notification of Intention to Award 178
Letter of Acceptance 182
Contract Agreement 183
Performance Security - Bank Guarantee 185
Advance Payment Security 186

Notification of Intention to Award

[***This Notification of Intention to Award shall be sent to each Bidder that submitted a Bid.***]

[***Send this Notification to the Bidder's Authorized Representative named in the Bidder Information Form***]

For the attention of Bidder's Authorized Representative

Name: *[insert Authorized Representative's name]*

Address: *[insert Authorized Representative's Address]*

Telephone/Fax numbers: *[insert Authorized Representative's telephone/fax numbers]*

Email Address: *[insert Authorized Representative's email address]*

[IMPORTANT: insert the date that this Notification is transmitted to Bidders. The Notification must be sent to all Bidders simultaneously. This means on the same date and as close to the same time as possible.]

DATE OF TRANSMISSION: This Notification is sent by: [*email/fax*] on [*date*] (local time)

Notification of Intention to Award
Employer: *[insert the name of the Employer]*
Project: *[insert name of project]*
Contract title: *[insert the name of the contract]*
Country: *[insert country where RFB is issued]*
Loan No. /Credit No. / Grant No.: *[insert reference number for loan/credit/grant]*
RFB No: *[insert RFB reference number from Procurement Plan]*

This Notification of Intention to Award (Notification) notifies you of our decision to award the above contract. The transmission of this Notification begins the Standstill Period. During the Standstill Period, you may:

a) request a debriefing in relation to the evaluation of your Bid, and/or

b) submit a Procurement-related Complaint in relation to the decision to award the contract.

1. The successful Bidder

Name:	[*insert name of successful Bidder*]
Address:	[*insert address of the successful Bidder*]
Contract price:	[*insert contract price of the successful Bid*]

2. Other Bidders ***[INSTRUCTIONS: insert names of all Bidders that submitted a Bid. If the Bid's price was evaluated include the evaluated price as well as the Bid price as read out.]***

Name of Bidder	Bid price	Evaluated Bid price (if applicable)
[*insert name*]	[*insert Bid price*]	[*insert evaluated price*]
[*insert name*]	[*insert Bid price*]	[*insert evaluated price*]
[*insert name*]	[*insert Bid price*]	[*insert evaluated price*]
[*insert name*]	[*insert Bid price*]	[*insert evaluated price*]
[*insert name*]	[*insert Bid price*]	[*insert evaluated price*]

3. Reason/s why your Bid was unsuccessful

[INSTRUCTIONS: State the reason/s why this Bidder's Bid was unsuccessful. Do NOT include: (a) a point by point comparison with another Bidder's Bid or (b) information that is marked confidential by the Bidder in its Bid.]

4. How to request a debriefing

DEADLINE: The deadline to request a debriefing expires at midnight on [*insert date*] (local time).

You may request a debriefing in relation to the results of the evaluation of your Bid. If you decide to request a debriefing your written request must be made within three (3) Business Days of receipt of this Notification of Intention to Award.

Provide the contract name, reference number, name of the Bidder, contact details; and address the request for debriefing as follows:

Attention: [*insert full name of person, if applicable*]

Title/position: [*insert title/position*]

Agency: [*insert name of Employer*]

Email address: [*insert email address*]

Fax number: [*insert fax number*] ***delete if not used***

If your request for a debriefing is received within the 3 Business Days deadline, we will provide the debriefing within five (5) Business Days of receipt of your request. If we are unable to provide the debriefing within this period, the Standstill Period shall be extended by five (5) Business Days after the date that the debriefing is provided. If this happens, we will notify you and confirm the date that the extended Standstill Period will end.

The debriefing may be in writing, by phone, video conference call or in person. We shall promptly advise you in writing how the debriefing will take place and confirm the date and time.

If the deadline to request a debriefing has expired, you may still request a debriefing. In this case, we will provide the debriefing as soon as practicable, and normally no later than fifteen (15) Business Days from the date of publication of the Contract Award Notice.

5. How to make a complaint

Period: Procurement-related Complaint challenging the decision to award shall be submitted by midnight, [*insert date*] (local time).

Provide the contract name, reference number, name of the Bidder, contact details; and address the Procurement-related Complaint as follows:

Attention: [*insert full name of person, if applicable*]

Title/position: [*insert title/position*]

Agency: [*insert name of Employer*]

Email address: [*insert email address*]

Fax number: [*insert fax number*] ***delete if not used***

At this point in the procurement process, you may submit a Procurement-related Complaint challenging the decision to award the contract. You do not need to have requested, or received, a debriefing before making this complaint. Your complaint must be submitted within the Standstill Period and received by us before the Standstill Period ends.

Further information:

For more information see the Procurement Regulations for IPF Borrowers (Procurement Regulations)[https://policies.worldbank.org/sites/ppf3/PPFDocuments/Forms/DispPage.aspx?docid=4005] (Annex III). You should read these provisions before preparing and submitting your complaint. In addition, the World Bank's Guidance "How to make a Procurement-related Complaint" [http://www.worldbank.org/en/projects-operations/products-and-services/brief/procurement-new-framework#framework] provides a useful explanation of the process, as well as a sample letter of complaint.

In summary, there are four essential requirements:

1. You must be an 'interested party'. In this case, that means a Bidder who submitted a Bid in this bidding process, and is the recipient of a Notification of Intention to Award.
2. The complaint can only challenge the decision to award the contract.
3. You must submit the complaint within the period stated above.

4. You must include, in your complaint, all of the information required by the Procurement Regulations (as described in Annex III).

6. Standstill Period

DEADLINE: The Standstill Period is due to end at midnight on [*insert date*] (local time).

The Standstill Period lasts ten (10) Business Days after the date of transmission of this Notification of Intention to Award.

The Standstill Period may be extended as stated in Section 4 above.

If you have any questions regarding this Notification, please do not hesitate to contact us.

On behalf of the Employer:

Signature: _____

Name: _____

Title/position: _____

Telephone: _____

Email: _____

Letter of Acceptance

[on letterhead paper of the Employer***]***

. . . . . ***[date]***. . . . . .

To: . . . . . ***[name and address of the Contractor]*** . . . . . .

Subject: . . . . . ***[Notification of Award Contract No]***. . . . . .

This is to notify you that your Bid dated . . . . ***[insert date] . .*** . . for execution of the . . . . . ***.[insert name of the contract and identification number, as given in the PCC]*** . . . . . for the Accepted Contract Amount of . . . . . ***.[insert amount in numbers and words and name of currency]***, as corrected and modified in accordance with the Instructions to Bidders is hereby accepted by our Agency.

You are requested to furnish (i) the Performance Security and an Environmental and Social (ES) Performance Security ***[Delete ES Performance Security if it is not required under the contract]*** within 28 days in accordance with the Conditions of Contract, using for that purpose the of the Performance Security Form and the ES Performance Security Form, ***[Delete reference to the ES Performance Security Form if it is not required under the contract]*** and (ii) the additional information on beneficial ownership in accordance with BDS ITB 47.1, within eight (8) Business days using the Beneficial Ownership Disclosure Form, included in Section X - Contract Forms, of the bidding document.
[Choose one of the following statements:]

We accept that _____***[insert the name of Adjudicator proposed by the Bidder]*** be appointed as the Adjudicator.

[or]

We do not accept that _____***[insert the name of the Adjudicator proposed by the Bidder]*** be appointed as the Adjudicator, and by sending a copy of this Letter of Acceptance to _____***[insert name of the Appointing Authority]***, the Appointing Authority, we are hereby requesting such Authority to appoint the Adjudicator in accordance with ITB 48.1 and GCC Sub-Clause 23.1.

Authorized Signature:

Name and Title of Signatory:

Name of Agency:

Attachment: Contract Agreement

Contract Agreement

THIS AGREEMENT made the . . . . . .day of . . . . . ., ..., between . . . . . ***[name of the*** Employer***]***. . . . . (hereinafter "the Employer"), of the one part, and . . . . . ***[name of the Contractor]***. . . . .(hereinafter "the Contractor"), of the other part:

WHEREAS the Employer desires that the Works known as . . . . . ***[name of the Contract]***. . . . .should be executed by the Contractor, and has accepted a Bid by the Contractor for the execution and completion of these Works and the remedying of any defects therein,

The Employer and the Contractor agree as follows:

1. In this Agreement words and expressions shall have the same meanings as are respectively assigned to them in the Contract documents referred to.

2. The following documents shall be deemed to form and be read and construed as part of this Agreement. This Agreement shall prevail over all other Contract documents.

(a) the Letter of Acceptance

(b) the Letter of Bid

(c) the addenda Nos _____(if any)

(d) the Particular Conditions

(e) the General Conditions of Contract, including appendix;

(f) the Specifications

(g) the Drawings

(h) Bill of Quantities;[28] and

(i) any other document listed in the PCC as forming part of the Contract, but not limited to;

i. the ES Management Strategies and Implementation Plans**;** and

ii. Code of Conduct for Contractor's Personnel (ES).

3. In consideration of the payments to be made by the Employer to the Contractor as specified in this Agreement, the Contractor hereby covenants with the Employer to execute the Works and to remedy defects therein in conformity in all respects with the provisions of the Contract.

[28] In lump sum contracts, delete "Bill of Quantities" and replace with "Activity Schedule."

4. The Employer hereby covenants to pay the Contractor in consideration of the execution and completion of the Works and the remedying of defects therein, the Contract Price or such other sum as may become payable under the provisions of the Contract at the times and in the manner prescribed by the Contract.

IN WITNESS whereof the parties hereto have caused this Agreement to be executed in accordance with the laws of . . . . . ***[name of the borrowing country]***. . . . .on the day, month and year specified above.

Signed by:	Signed by: .....
for and on behalf of the Employer	for and on behalf the Contractor
in the presence of:	in the presence of: .....
Witness, Name, Signature, Address, Date	Witness, Name, Signature, Address, Date

Performance Security - Bank Guarantee

[Guarantor letterhead or SWIFT identifier code]
Beneficiary: *[insert name and Address of* Employer*]*

Date: _ *[Insert date of issue]*

PERFORMANCE GUARANTEE No.: *[Insert guarantee reference number]*
Guarantor: *[Insert name and address of place of issue, unless indicated in the letterhead]*
We have been informed that _ *[insert name of Contractor, which in the case of a joint venture shall be the name of the joint venture]* (hereinafter called "the Applicant") has entered into Contract No. *[insert reference number of the contract]* dated *[insert date]* with the Beneficiary, for the execution of _ *[insert name of contract and brief description of* Works*]* (hereinafter called "the Contract").
Furthermore, we understand that, according to the conditions of the Contract, a performance guarantee is required.
At the request of the Applicant, we as Guarantor, hereby irrevocably undertake to pay the Beneficiary any sum or sums not exceeding in total an amount of *[insert amount in figures]* (_____) *[insert amount in words]*,[291] such sum being payable in the types and proportions of currencies in which the Contract Price is payable, upon receipt by us of the Beneficiary's complying demand supported by the Beneficiary's statement, whether in the demand itself or in a separate signed document accompanying or identifying the demand, stating that the Applicant is in breach of its obligation(s) under the Contract, without the Beneficiary needing to prove or to show grounds for your demand or the sum specified therein.
This guarantee shall expire, no later than the …. Day of ……, 2… [302], and any demand for payment under it must be received by us at this office indicated above on or before that date.
This guarantee is subject to the Uniform Rules for Demand Guarantees (URDG) 2010 Revision, ICC Publication No. 758, except that the supporting statement under Article 15(a) is hereby excluded.

_____
[signature(s)]

---

[291] *The Guarantor shall insert an amount representing the percentage of the Accepted Contract Amount specified in the Letter of Acceptance, less provisional sums, if any, and denominated either in the currency(ies) of the Contract or a freely convertible currency acceptable to the Beneficiary.*

[302] *Insert the date twenty-eight days after the expected completion date as described in GCC Sub-Clause 57.1. The Employer should note that in the event of an extension of this date for completion of the Contract, the Employer would need to request an extension of this guarantee from the Guarantor. Such request must be in writing and must be made prior to the expiration date established in the guarantee. In preparing this guarantee, the Employer might consider adding the following text to the form, at the end of the penultimate paragraph: "The Guarantor agrees to a one-time extension of this guarantee for a period not to exceed [six months][one year], in response to the Beneficiary's written request for such extension, such request to be presented to the Guarantor before the expiry of the guarantee."*

Advance Payment Security

Demand Guarantee

[Guarantor letterhead or SWIFT identifier code]
Beneficiary: *[Insert name and Address of* Employer*]*
Date: *[Insert date of issue]*
ADVANCE PAYMENT GUARANTEE No.: *[Insert guarantee reference number]*
Guarantor: *[Insert name and address of place of issue, unless indicated in the letterhead]*

We have been informed that *[insert name of Contractor, which in the case of a joint venture shall be the name of the joint venture]* (hereinafter called "the Applicant") has entered into Contract No. *[insert reference number of the contract]* dated *[insert date]* with the Beneficiary, for the execution of *[insert name of contract and brief description of* Works*]* (hereinafter called "the Contract").
Furthermore, we understand that, according to the conditions of the Contract, an advance payment in the sum *[insert amount in figures]* () *[insert amount in words]* is to be made against an advance payment guarantee.
At the request of the Applicant, we as Guarantor, hereby irrevocably undertake to pay the Beneficiary any sum or sums not exceeding in total an amount of *[insert amount in figures]* (_____) *[insert amount in words]*[311] upon receipt by us of the Beneficiary's complying demand supported by the Beneficiary's statement, whether in the demand itself or in a separate signed document accompanying or identifying the demand, stating either that the Applicant:

(a) has used the advance payment for purposes other than the costs of mobilization in respect of the Works; or

(b) has failed to repay the advance payment in accordance with the Contract conditions, specifying the amount which the Applicant has failed to repay.

A demand under this guarantee may be presented as from the presentation to the Guarantor of a certificate from the Beneficiary's bank stating that the advance payment referred to above has been credited to the Applicant on its account number *[insert number]* at *[insert name and address of Applicant's bank]*..
The maximum amount of this guarantee shall be progressively reduced by the amount of the advance payment repaid by the Applicant as specified in copies of interim statements or payment certificates which shall be presented to us. This guarantee shall expire, at the latest, upon our receipt of a copy of the interim payment certificate indicating that ninety (90) percent of the Accepted Contract Amount, less provisional sums, has been certified for payment, or on the *[insert day]* day of *[insert month]*, 2 *[insert year]*,[322] whichever is earlier. Consequently,

---

[311] *The Guarantor shall insert an amount representing the amount of the advance payment and denominated either in the currency(ies) of the advance payment as specified in the Contract, or in a freely convertible currency acceptable to the Employer.*

[322] *Insert the date twenty-eight days after the expected completion date as described in GCC Sub-Clause 57.1.. The Employer should note that in the event of an extension of the expected completion date, the Employer would need to request an extension of this guarantee from the Guarantor. Such request must be in writing and must be made prior to the expiration date established in the guarantee. In preparing this guarantee,*

any demand for payment under this guarantee must be received by us at this office on or before that date.

This guarantee is subject to the Uniform Rules for Demand Guarantees (URDG) 2010 Revision, ICC Publication No. 758, except that the supporting statement under Article 15(a) is hereby excluded.

_____
[signature(s)]

the Employer might consider adding the following text to the form, at the end of the penultimate paragraph: "The Guarantor agrees to a one-time extension of this guarantee for a period not to exceed [six months][one year], in response to the Beneficiary's written request for such extension, such request to be presented to the Guarantor before the expiry of the guarantee."